Special Topic: Binary Vapor Cycles

10-82C Binary power cycle is a cycle which is actually a combination of two cycles; one in the high temperature region, and the other in the low temperature region. Its purpose is to increase thermal efficiency.

10-83C Consider the heat exchanger of a binary power cycle. The working fluid of the topping cycle (cycle A) enters the heat exchanger at state 1 and leaves at state 2. The working fluid of the bottoming cycle (cycle B) enters at state 3 and leaves at state 4. Neglecting any changes in kinetic and potential energies, and assuming the heat exchanger is well-insulated, the steady-flow energy balance relation yields

$$\dot{E}_{\text{in}} - \dot{E}_{\text{out}} = \Delta\dot{E}_{\text{system}}^{\nearrow 0\,(\text{steady})} = 0$$

$$\dot{E}_{\text{in}} = \dot{E}_{\text{out}}$$

$$\sum \dot{m}_e h_e = \sum \dot{m}_i h_i$$

$$\dot{m}_A h_2 + \dot{m}_B h_4 = \dot{m}_A h_1 + \dot{m}_B h_3 \;\; or \;\; \dot{m}_A (h_2 - h_1) = \dot{m}_B (h_3 - h_4)$$

Thus,

$$\frac{\dot{m}_A}{\dot{m}_B} = \frac{h_3 - h_4}{h_2 - h_1}$$

10-84C Steam is not an ideal fluid for vapor power cycles because its critical temperature is low, its saturation dome resembles an inverted V, and its condenser pressure is too low.

10-85C Because mercury has a high critical temperature, relatively low critical pressure, but a very low condenser pressure. It is also toxic, expensive, and has a low enthalpy of vaporization.

10-86C In binary vapor power cycles, both cycles are vapor cycles. In the combined gas-steam power cycle, one of the cycles is a gas cycle.

Review Problems

10-87 It is to be demonstrated that the thermal efficiency of a combined gas-steam power plant η_{cc} can be expressed as $\eta_{cc} = \eta_g + \eta_s - \eta_g\eta_s$ where $\eta_g = W_g / Q_{in}$ and $\eta_s = W_s / Q_{g,out}$ are the thermal efficiencies of the gas and steam cycles, respectively, and the efficiency of a combined cycle is to be obtained.

Analysis The thermal efficiencies of gas, steam, and combined cycles can be expressed as

$$\eta_{cc} = \frac{W_{total}}{Q_{in}} = 1 - \frac{Q_{out}}{Q_{in}}$$

$$\eta_g = \frac{W_g}{Q_{in}} = 1 - \frac{Q_{g,out}}{Q_{in}}$$

$$\eta_s = \frac{W_s}{Q_{g,out}} = 1 - \frac{Q_{out}}{Q_{g,out}}$$

where Q_{in} is the heat supplied to the gas cycle, where Q_{out} is the heat rejected by the steam cycle, and where $Q_{g,out}$ is the heat rejected from the gas cycle and supplied to the steam cycle.

Using the relations above, the expression $\eta_g + \eta_s - \eta_g\eta_s$ can be expressed as

$$\begin{aligned}
\eta_g + \eta_s - \eta_g\eta_s &= \left(1 - \frac{Q_{g,out}}{Q_{in}}\right) + \left(1 - \frac{Q_{out}}{Q_{g,out}}\right) - \left(1 - \frac{Q_{g,out}}{Q_{in}}\right)\left(1 - \frac{Q_{out}}{Q_{g,out}}\right) \\
&= 1 - \frac{Q_{g,out}}{Q_{in}} + 1 - \frac{Q_{out}}{Q_{g,out}} - 1 + \frac{Q_{g,out}}{Q_{in}} + \frac{Q_{out}}{Q_{g,out}} - \frac{Q_{out}}{Q_{in}} \\
&= 1 - \frac{Q_{out}}{Q_{in}} \\
&= \eta_{cc}
\end{aligned}$$

Therefore, the proof is complete. Using the relation above, the thermal efficiency of the given combined cycle is determined to be

$$\eta_{cc} = \eta_g + \eta_s - \eta_g\eta_s = 0.4 + 0.30 - 0.40 \times 0.30 = \mathbf{0.58}$$

10-88 The thermal efficiency of a combined gas-steam power plant η_{cc} can be expressed in terms of the thermal efficiencies of the gas and the steam turbine cycles as $\eta_{cc} = \eta_g + \eta_s - \eta_g\eta_s$. It is to be shown that the value of η_{cc} is greater than either of η_g or η_s.

Analysis By factoring out terms, the relation $\eta_{cc} = \eta_g + \eta_s - \eta_g\eta_s$ can be expressed as

$$\eta_{cc} = \eta_g + \eta_s - \eta_g\eta_s = \eta_g + \underbrace{\eta_s(1 - \eta_g)}_{\substack{\text{Positive since} \\ \eta_g < 1}} > \eta_g$$

or

$$\eta_{cc} = \eta_g + \eta_s - \eta_g\eta_s = \eta_s + \underbrace{\eta_g(1 - \eta_s)}_{\substack{\text{Positive since} \\ \eta_s < 1}} > \eta_s$$

Thus we conclude that the combined cycle is more efficient than either of the gas turbine or steam turbine cycles alone.

10-89 A steam power plant operating on the ideal Rankine cycle with reheating is considered. The reheat pressures of the cycle are to be determined for the cases of single and double reheat.

Assumptions **1** Steady operating conditions exist. **2** Kinetic and potential energy changes are negligible.

Analysis (*a*) Single Reheat**:** From the steam tables (Tables A-4, A-5, and A-6),

$$\left.\begin{array}{l} P_6 = 10 \text{ kPa} \\ x_6 = 0.92 \end{array}\right\} \begin{array}{l} h_6 = h_f + x_6 h_{fg} = 191.81 + (0.92)(2392.1) = 2392.5 \text{ kJ/kg} \\ s_6 = s_f + x_6 s_{fg} = 0.6492 + (0.92)(7.4996) = 7.5488 \text{ kJ/kg} \cdot \text{K} \end{array}$$

$$\left.\begin{array}{l} T_5 = 600°\text{C} \\ s_5 = s_6 \end{array}\right\} P_5 = \mathbf{2780\ kPa}$$

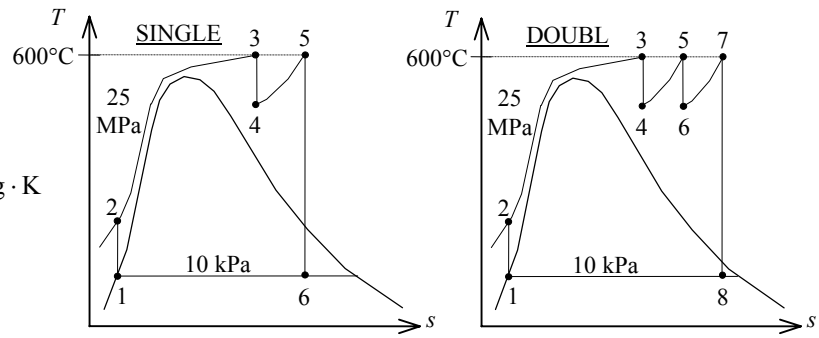

(*b*) Double Reheat :

$$\left.\begin{array}{l} P_3 = 25 \text{ MPa} \\ T_3 = 600°\text{C} \end{array}\right\} s_3 = 6.3637 \text{ kJ/kg} \cdot \text{K}$$

$$\begin{array}{l} P_4 = P_x \\ s_4 = s_3 \end{array} \quad \text{and} \quad \begin{array}{l} P_5 = P_x \\ T_5 = 600°\text{C} \end{array}$$

Any pressure P_x selected between the limits of 25 MPa and 2.78 MPa will satisfy the requirements, and can be used for the double reheat pressure.

10-90E A geothermal power plant operating on the simple Rankine cycle using an organic fluid as the working fluid is considered. The exit temperature of the geothermal water from the vaporizer, the rate of heat rejection from the working fluid in the condenser, the mass flow rate of geothermal water at the preheater, and the thermal efficiency of the Level I cycle of this plant are to be determined.

Assumptions **1** Steady operating conditions exist. **2** Kinetic and potential energy changes are negligible.

Analysis (*a*) The exit temperature of geothermal water from the vaporizer is determined from the steady-flow energy balance on the geothermal water (brine),

$$\dot{Q}_{\text{brine}} = \dot{m}_{\text{brine}} c_p (T_2 - T_1)$$
$$-22{,}790{,}000 \text{ Btu/h} = (384{,}286 \text{ lbm/h})(1.03 \text{ Btu/lbm}\cdot°\text{F})(T_2 - 325°\text{F})$$
$$T_2 = \mathbf{267.4°F}$$

(*b*) The rate of heat rejection from the working fluid to the air in the condenser is determined from the steady-flow energy balance on air,

$$\dot{Q}_{\text{air}} = \dot{m}_{\text{air}} c_p (T_9 - T_8)$$
$$= (4{,}195{,}100 \text{ lbm/h})(0.24 \text{ Btu/lbm}\cdot°\text{F})(84.5 - 55°\text{F})$$
$$= \mathbf{29.7\ MBtu/h}$$

(*c*) The mass flow rate of geothermal water at the preheater is determined from the steady-flow energy balance on the geothermal water,

$$\dot{Q}_{\text{geo}} = \dot{m}_{\text{geo}} c_p (T_{\text{out}} - T_{\text{in}})$$
$$-11{,}140{,}000 \text{ Btu/h} = \dot{m}_{\text{geo}} (1.03 \text{ Btu/lbm}\cdot°\text{F})(154.0 - 211.8°\text{F})$$
$$\dot{m}_{\text{geo}} = \mathbf{187{,}120\ \ lbm/h}$$

(*d*) The rate of heat input is

$$\dot{Q}_{\text{in}} = \dot{Q}_{\text{vaporizer}} + \dot{Q}_{\text{reheater}} = 22{,}790{,}000 + 11{,}140{,}000$$
$$= 33{,}930{,}000 \text{ Btu/h}$$

and

$$\dot{W}_{\text{net}} = 1271 - 200 = 1071 \text{ kW}$$

Then,

$$\eta_{\text{th}} = \frac{\dot{W}_{\text{net}}}{\dot{Q}_{\text{in}}} = \frac{1071 \text{ kW}}{33{,}930{,}000 \text{ Btu/h}} \left(\frac{3412.14 \text{ Btu}}{1 \text{ kWh}} \right) = \mathbf{10.8\%}$$

10-91 A steam power plant operates on the simple ideal Rankine cycle. The turbine inlet temperature, the net power output, the thermal efficiency, and the minimum mass flow rate of the cooling water required are to be determined.

Assumptions **1** Steady operating conditions exist. **2** Kinetic and potential energy changes are negligible.

Analysis (*a*) From the steam tables (Tables A-4, A-5, and A-6),

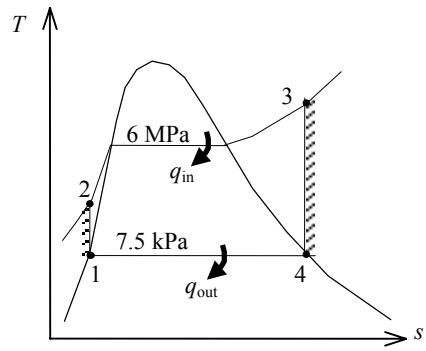

$$h_1 = h_{f\ @\ 7.5\ \text{kPa}} = 168.75\ \text{kJ/kg}$$
$$v_1 = v_{f\ @\ 7.5\ \text{kPa}} = 0.001008\ \text{m}^3/\text{kg}$$
$$T_1 = T_{\text{sat}\ @\ 7.5\ \text{kPa}} = 40.29°\text{C}$$

$$w_{\text{p,in}} = v_1(P_2 - P_1)$$
$$= (0.001008\ \text{m}^3/\text{kg})(6000 - 7.5\ \text{kPa})\left(\frac{1\ \text{kJ}}{1\ \text{kPa}\cdot\text{m}^3}\right)$$
$$= 6.04\ \text{kJ/kg}$$
$$h_2 = h_1 + w_{\text{p,in}} = 168.75 + 6.04 = 174.79\ \text{kJ/kg}$$

$$h_4 = h_{g\ @\ 7.5\ \text{kPa}} = 2574.0\ \text{kJ/kg}$$
$$s_4 = s_{g\ @\ 7.5\ \text{kPa}} = 8.2501\ \text{kJ/kg}$$

$$\left.\begin{array}{l} P_3 = 6\ \text{MPa} \\ s_3 = s_4 \end{array}\right\} \begin{array}{l} h_3 = 4852.2\ \text{kJ/kg} \\ T_3 = \mathbf{1089.2°C} \end{array}$$

(*b*)
$$q_{\text{in}} = h_3 - h_2 = 4852.2 - 174.79 = 4677.4\ \text{kJ/kg}$$
$$q_{\text{out}} = h_4 - h_1 = 2574.0 - 168.75 = 2405.3\ \text{kJ/kg}$$
$$w_{\text{net}} = q_{\text{in}} - q_{\text{out}} = 4677.4 - 2405.3 = 2272.1\ \text{kJ/kg}$$

and

$$\eta_{\text{th}} = \frac{w_{\text{net}}}{q_{\text{in}}} = \frac{2272.1\ \text{kJ/kg}}{4677.4\ \text{kJ/kg}} = \mathbf{48.6\%}$$

Thus,

$$\dot{W}_{\text{net}} = \eta_{\text{th}}\dot{Q}_{\text{in}} = (0.4857)(40{,}000\ \text{kJ/s}) = \mathbf{19{,}428\ kJ/s}$$

(*c*) The mass flow rate of the cooling water will be minimum when it is heated to the temperature of the steam in the condenser, which is 40.29°C,

$$\dot{Q}_{\text{out}} = \dot{Q}_{\text{in}} - \dot{W}_{\text{net}} = 40{,}000 - 19{,}428 = 20{,}572\ \text{kJ/s}$$

$$\dot{m}_{\text{cool}} = \frac{\dot{Q}_{\text{out}}}{c\Delta T} = \frac{20{,}572\ \text{kJ/s}}{(4.18\ \text{kJ/kg}\cdot°\text{C})(40.29 - 15°\text{C})} = \mathbf{194.6\ \ kg/s}$$

10-92 A steam power plant operating on an ideal Rankine cycle with two stages of reheat is considered. The thermal efficiency of the cycle and the mass flow rate of the steam are to be determined.

Assumptions **1** Steady operating conditions exist. **2** Kinetic and potential energy changes are negligible.

Analysis (*a*) From the steam tables (Tables A-4, A-5, and A-6),

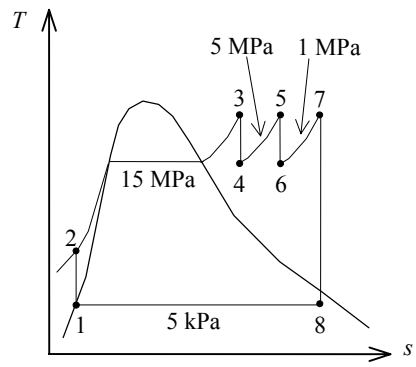

$$h_1 = h_{f\ @\ 5\ \text{kPa}} = 137.75\ \text{kJ/kg}$$

$$v_1 = v_{f\ @\ 5\ \text{kPa}} = 0.001005\ \text{m}^3/\text{kg}$$

$$w_{\text{p,in}} = v_1(P_2 - P_1)$$
$$= (0.001005\ \text{m}^3/\text{kg})(15{,}000 - 5\ \text{kPa})\left(\frac{1\ \text{kJ}}{1\ \text{kPa}\cdot\text{m}^3}\right)$$
$$= 15.07\ \text{kJ/kg}$$

$$h_2 = h_1 + w_{\text{p,in}} = 137.75 + 15.07 = 152.82\ \text{kJ/kg}$$

$$\left.\begin{array}{l} P_3 = 15\ \text{MPa} \\ T_3 = 500°\text{C} \end{array}\right\} \begin{array}{l} h_3 = 3310.8\ \text{kJ/kg} \\ s_3 = 6.3480\ \text{kJ/kg}\cdot\text{K} \end{array}$$

$$\left.\begin{array}{l} P_4 = 5\ \text{MPa} \\ s_4 = s_3 \end{array}\right\} h_4 = 3007.4\ \text{kJ/kg}$$

$$\left.\begin{array}{l} P_5 = 5\ \text{MPa} \\ T_5 = 500°\text{C} \end{array}\right\} \begin{array}{l} h_5 = 3434.7\ \text{kJ/kg} \\ s_5 = 6.9781\ \text{kJ/kg}\cdot\text{K} \end{array}$$

$$\left.\begin{array}{l} P_6 = 1\ \text{MPa} \\ s_6 = s_5 \end{array}\right\} h_6 = 2971.3\ \text{kJ/kg}$$

$$\left.\begin{array}{l} P_7 = 1\ \text{MPa} \\ T_7 = 500°\text{C} \end{array}\right\} \begin{array}{l} h_7 = 3479.1\ \text{kJ/kg} \\ s_7 = 7.7642\ \text{kJ/kg}\cdot\text{K} \end{array}$$

$$\left.\begin{array}{l} P_8 = 5\ \text{kPa} \\ s_8 = s_7 \end{array}\right\} \begin{array}{l} x_8 = \dfrac{s_8 - s_f}{s_{fg}} = \dfrac{7.7642 - 0.4762}{7.9176} = 0.9204 \\ h_8 = h_f + x_8 h_{fg} = 137.75 + (0.9204)(2423.0) = 2367.9\ \text{kJ/kg} \end{array}$$

Then,

$$q_{\text{in}} = (h_3 - h_2) + (h_5 - h_4) + (h_7 - h_6)$$
$$= 3310.8 - 152.82 + 3434.7 - 3007.4 + 3479.1 - 2971.3 = 4093.1\ \text{kJ/kg}$$
$$q_{\text{out}} = h_8 - h_1 = 2367.9 - 137.75 = 2230.2\ \text{kJ/kg}$$
$$w_{\text{net}} = q_{\text{in}} - q_{\text{out}} = 4093.1 - 2230.2 = 1862.9\ \text{kJ/kg}$$

Thus,

$$\eta_{\text{th}} = \frac{w_{\text{net}}}{q_{\text{in}}} = \frac{1862.9\ \text{kJ/kg}}{4093.1\ \text{kJ/kg}} = \mathbf{45.5\%}$$

(*b*) $$\dot{m} = \frac{\dot{W}_{\text{net}}}{w_{\text{net}}} = \frac{120{,}000\ \text{kJ/s}}{1862.9\ \text{kJ/kg}} = \mathbf{64.4\ kg/s}$$

10-93 An 150-MW steam power plant operating on a regenerative Rankine cycle with an open feedwater heater is considered. The mass flow rate of steam through the boiler, the thermal efficiency of the cycle, and the irreversibility associated with the regeneration process are to be determined.

Assumptions **1** Steady operating conditions exist. **2** Kinetic and potential energy changes are negligible.

Analysis

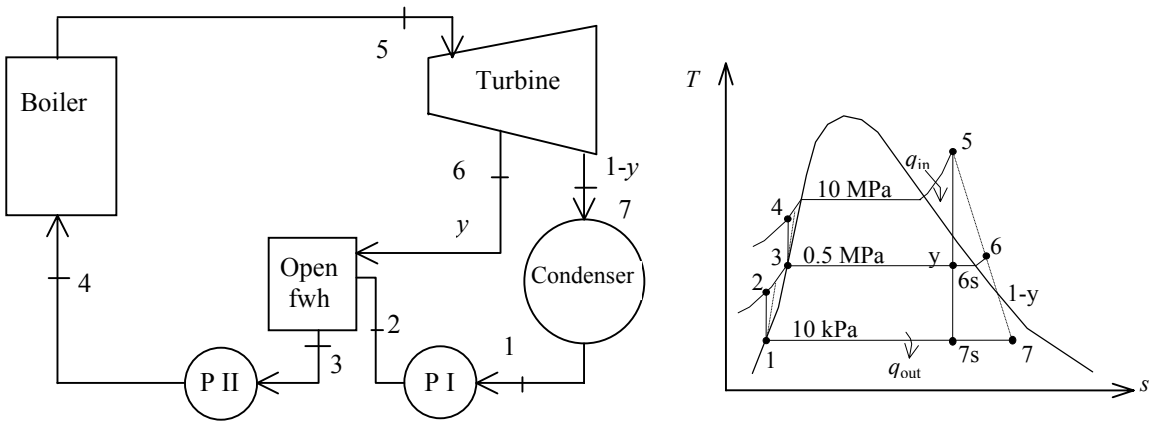

(*a*) From the steam tables (Tables A-4, A-5, and A-6),

$$h_1 = h_{f\,@\,10\,\text{kPa}} = 191.81\,\text{kJ/kg}$$
$$v_1 = v_{f\,@\,10\,\text{kPa}} = 0.00101\,\text{m}^3/\text{kg}$$

$$w_{\text{pI,in}} = v_1(P_2 - P_1)/\eta_p$$
$$= (0.00101\,\text{m}^3/\text{kg})(500 - 10\,\text{kPa})\left(\frac{1\,\text{kJ}}{1\,\text{kPa}\cdot\text{m}^3}\right)/(0.95)$$
$$= 0.52\,\text{kJ/kg}$$
$$h_2 = h_1 + w_{\text{pI,in}} = 191.81 + 0.52 = 192.33\,\text{kJ/kg}$$

$$\left.\begin{array}{l} P_3 = 0.5\ \text{MPa} \\ \text{satliquid} \end{array}\right\} \begin{array}{l} h_3 = h_{f\,@\,0.5\,\text{MPa}} = 640.09\,\text{kJ/kg} \\ v_3 = v_{f\,@\,0.5\,\text{MPa}} = 0.001093\,\text{m}^3/\text{kg} \end{array}$$

$$w_{\text{pII,in}} = v_3(P_4 - P_3)/\eta_p$$
$$= (0.001093\ \text{m}^3/\text{kg})(10{,}000 - 500\ \text{kPa})\left(\frac{1\ \text{kJ}}{1\ \text{kPa}\cdot\text{m}^3}\right)/(0.95)$$
$$= 10.93\ \text{kJ/kg}$$
$$h_4 = h_3 + w_{\text{pII,in}} = 640.09 + 10.93 = 651.02\ \text{kJ/kg}$$

$$\left.\begin{array}{l} P_5 = 10\ \text{MPa} \\ T_5 = 500°\text{C} \end{array}\right\} \begin{array}{l} h_5 = 3375.1\ \text{kJ/kg} \\ s_5 = 6.5995\ \text{kJ/kg}\cdot\text{K} \end{array}$$

$$\left.\begin{array}{l} P_{6s} = 0.5\ \text{MPa} \\ s_{6s} = s_5 \end{array}\right\} \begin{array}{l} x_{6s} = \dfrac{s_{6s} - s_f}{s_{fg}} = \dfrac{6.5995 - 1.8604}{4.9603} = 0.9554 \\ h_{6s} = h_f + x_{6s}h_{fg} = 640.09 + (0.9554)(2108.0) \\ \quad = 2654.1\ \text{kJ/kg} \end{array}$$

$$\eta_T = \frac{h_5 - h_6}{h_5 - h_{6s}} \longrightarrow h_6 = h_5 - \eta_T(h_5 - h_{6s})$$
$$= 3375.1 - (0.80)(3375.1 - 2654.1)$$
$$= 2798.3\ \text{kJ/kg}$$

$$x_{7s} = \frac{s_{7s} - s_f}{s_{fg}} = \frac{6.5995 - 0.6492}{7.4996} = 0.7934$$

$$\left.\begin{array}{l} P_{7s} = 10 \text{ kPa} \\ s_{7s} = s_5 \end{array}\right\} \begin{array}{l} h_{7s} = h_f + x_{7s} h_{fg} = 191.81 + (0.7934)(2392.1) \\ \quad = 2089.7 \text{ kJ/kg} \end{array}$$

$$\eta_T = \frac{h_5 - h_7}{h_5 - h_{7s}} \longrightarrow \begin{array}{l} h_7 = h_5 - \eta_T (h_5 - h_{7s}) \\ \quad = 3375.1 - (0.80)(3375.1 - 2089.7) \\ \quad = 2346.8 \text{ kJ/kg} \end{array}$$

The fraction of steam extracted is determined from the steady-flow energy balance equation applied to the feedwater heaters. Noting that $\dot{Q} \cong \dot{W} \cong \Delta ke \cong \Delta pe \cong 0$,

$$\dot{E}_{\text{in}} - \dot{E}_{\text{out}} = \Delta \dot{E}_{\text{system}}^{\nearrow 0 \text{ (steady)}} = 0$$

$$\dot{E}_{\text{in}} = \dot{E}_{\text{out}}$$

$$\sum \dot{m}_i h_i = \sum \dot{m}_e h_e \longrightarrow \dot{m}_6 h_6 + \dot{m}_2 h_2 = \dot{m}_3 h_3 \longrightarrow y h_6 + (1 - y) h_2 = 1(h_3)$$

where y is the fraction of steam extracted from the turbine ($= \dot{m}_6 / \dot{m}_3$). Solving for y,

$$y = \frac{h_3 - h_2}{h_6 - h_2} = \frac{640.09 - 192.33}{2798.3 - 192.33} = 0.1718$$

Then,

$$q_{\text{in}} = h_5 - h_4 = 3375.1 - 651.02 = 2724.1 \text{ kJ/kg}$$

$$q_{\text{out}} = (1 - y)(h_7 - h_1) = (1 - 0.1718)(2346.8 - 191.81) = 1784.7 \text{ kJ/kg}$$

$$w_{\text{net}} = q_{\text{in}} - q_{\text{out}} = 2724.1 - 1784.7 = 939.4 \text{ kJ/kg}$$

and

$$\dot{m} = \frac{\dot{W}_{\text{net}}}{w_{\text{net}}} = \frac{150{,}000 \text{ kJ/s}}{939.4 \text{ kJ/kg}} = \mathbf{159.7\ kg/s}$$

(*b*) The thermal efficiency is determined from

$$\eta_{\text{th}} = 1 - \frac{q_{\text{out}}}{q_{\text{in}}} = 1 - \frac{1784.7 \text{ kJ/kg}}{2724.1 \text{ kJ/kg}} = \mathbf{34.5\%}$$

Also,

$$\left.\begin{array}{l} P_6 = 0.5 \text{ MPa} \\ h_6 = 2798.3 \text{ kJ/kg} \end{array}\right\} s_6 = 6.9453 \text{ kJ/kg} \cdot \text{K}$$

$$s_3 = s_{f\ @\ 0.5 \text{ MPa}} = 1.8604 \text{ kJ/kg} \cdot \text{K}$$

$$s_2 = s_1 = s_{f\ @\ 10 \text{ kPa}} = 0.6492 \text{ kJ/kg} \cdot \text{K}$$

Then the irreversibility (or exergy destruction) associated with this regeneration process is

$$i_{\text{regen}} = T_0 s_{\text{gen}} = T_0 \left(\sum m_e s_e - \sum m_i s_i + \frac{q_{\text{surr}}}{T_L}^{\nearrow 0} \right) = T_0 [s_3 - y s_6 - (1 - y) s_2]$$

$$= (303 \text{ K})[1.8604 - (0.1718)(6.9453) - (1 - 0.1718)(0.6492)] = \mathbf{39.25\ kJ/kg}$$

10-94 An 150-MW steam power plant operating on an ideal regenerative Rankine cycle with an open feedwater heater is considered. The mass flow rate of steam through the boiler, the thermal efficiency of the cycle, and the irreversibility associated with the regeneration process are to be determined.

Assumptions **1** Steady operating conditions exist. **2** Kinetic and potential energy changes are negligible.

Analysis

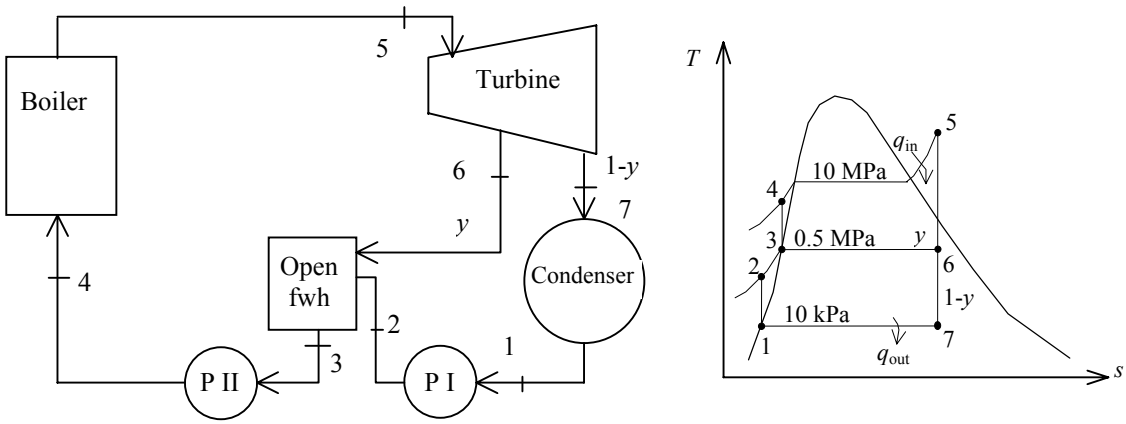

(*a*) From the steam tables (Tables A-4, A-5, and A-6),

$$h_1 = h_{f\ @\ 10\ \text{kPa}} = 191.81\ \text{kJ/kg}$$
$$v_1 = v_{f\ @\ 10\ \text{kPa}} = 0.00101\ \text{m}^3/\text{kg}$$

$$w_{\text{pI,in}} = v_1(P_2 - P_1)$$
$$= (0.00101\ \text{m}^3/\text{kg})(500 - 10\ \text{kPa})\left(\frac{1\ \text{kJ}}{1\ \text{kPa}\cdot\text{m}^3}\right) = 0.50\ \text{kJ/kg}$$

$$h_2 = h_1 + w_{\text{pI,in}} = 191.81 + 0.50 = 192.30\ \text{kJ/kg}$$

$$\left.\begin{array}{l} P_3 = 0.5\ \text{MPa} \\ \text{sat.liquid} \end{array}\right\} \begin{array}{l} h_3 = h_{f\ @\ 0.5\ \text{MPa}} = 640.09\ \text{kJ/kg} \\ v_3 = v_{f\ @\ 0.5\ \text{MPa}} = 0.001093\ \text{m}^3/\text{kg} \end{array}$$

$$w_{\text{pII,in}} = v_3(P_4 - P_3)$$
$$= (0.001093\ \text{m}^3/\text{kg})(10{,}000 - 500\ \text{kPa})\left(\frac{1\ \text{kJ}}{1\ \text{kPa}\cdot\text{m}^3}\right) = 10.38\ \text{kJ/kg}$$

$$h_4 = h_3 + w_{\text{pII,in}} = 640.09 + 10.38 = 650.47\ \text{kJ/kg}$$

$$\left.\begin{array}{l} P_5 = 10\ \text{MPa} \\ T_5 = 500°\text{C} \end{array}\right\} \begin{array}{l} h_5 = 3375.1\ \text{kJ/kg} \\ s_5 = 6.5995\ \text{kJ/kg}\cdot\text{K} \end{array}$$

$$\left.\begin{array}{l} P_6 = 0.5\ \text{MPa} \\ s_6 = s_5 \end{array}\right\} \begin{array}{l} x_6 = \dfrac{s_6 - s_f}{s_{fg}} = \dfrac{6.5995 - 1.8604}{4.9603} = 0.9554 \\ h_6 = h_f + x_6 h_{fg} = 640.09 + (0.9554)(2108.0) = 2654.1\ \text{kJ/kg} \end{array}$$

$$\left.\begin{array}{l} P_7 = 10\ \text{kPa} \\ s_7 = s_5 \end{array}\right\} \begin{array}{l} x_7 = \dfrac{s_7 - s_f}{s_{fg}} = \dfrac{6.5995 - 0.6492}{7.4996} = 0.7934 \\ h_7 = h_f + x_7 h_{fg} = 191.81 + (0.7934)(2392.1) = 2089.7\ \text{kJ/kg} \end{array}$$

The fraction of steam extracted is determined from the steady-flow energy equation applied to the feedwater heaters. Noting that $\dot{Q} \cong \dot{W} \cong \Delta\text{ke} \cong \Delta\text{pe} \cong 0$,

$$\dot{E}_{\text{in}} - \dot{E}_{\text{out}} = \Delta\dot{E}_{\text{system}}^{\nearrow 0\,(\text{steady})} = 0 \;\rightarrow\; \dot{E}_{\text{in}} = \dot{E}_{\text{out}}$$

$$\sum \dot{m}_i h_i = \sum \dot{m}_e h_e \longrightarrow \dot{m}_6 h_6 + \dot{m}_2 h_2 = \dot{m}_3 h_3 \longrightarrow y h_6 + (1-y) h_2 = 1(h_3)$$

where y is the fraction of steam extracted from the turbine ($= \dot{m}_6 / \dot{m}_3$). Solving for y,

$$y = \frac{h_3 - h_2}{h_6 - h_2} = \frac{640.09 - 192.31}{2654.1 - 192.31} = 0.1819$$

Then,

$$q_{\text{in}} = h_5 - h_4 = 3375.1 - 650.47 = 2724.6 \text{ kJ/kg}$$

$$q_{\text{out}} = (1-y)(h_7 - h_1) = (1 - 0.1819)(2089.7 - 191.81) = 1552.7 \text{ kJ/kg}$$

$$w_{\text{net}} = q_{\text{in}} - q_{\text{out}} = 2724.6 - 1552.7 = 1172.0 \text{ kJ/kg}$$

and

$$\dot{m} = \frac{\dot{W}_{\text{net}}}{w_{\text{net}}} = \frac{150{,}000 \text{ kJ/s}}{1171.9 \text{ kJ/kg}} = \mathbf{128.0\ kg/s}$$

(*b*) The thermal efficiency is determined from

$$\eta_{\text{th}} = 1 - \frac{q_{\text{out}}}{q_{\text{in}}} = 1 - \frac{1552.7 \text{ kJ/kg}}{2724.7 \text{ kJ/kg}} = \mathbf{43.0\%}$$

Also,

$$s_6 = s_5 = 6.5995 \text{ kJ/kg} \cdot \text{K}$$

$$s_3 = s_{f\,@\,0.5\text{ MPa}} = 1.8604 \text{ kJ/kg} \cdot \text{K}$$

$$s_2 = s_1 = s_{f\,@\,10\text{ kPa}} = 0.6492 \text{ kJ/kg} \cdot \text{K}$$

Then the irreversibility (or exergy destruction) associated with this regeneration process is

$$i_{\text{regen}} = T_0 s_{\text{gen}} = T_0\left(\sum m_e s_e - \sum m_i s_i + \frac{q_{\text{surr}}}{T_L}^{\nearrow 0}\right) = T_0\left[s_3 - y s_6 - (1-y) s_2\right]$$

$$= (303 \text{ K})\left[1.8604 - (0.1819)(6.5995) - (1 - 0.1819)(0.6492)\right] = \mathbf{39.0\ kJ/kg}$$

10-95 An ideal reheat-regenerative Rankine cycle with one open feedwater heater is considered. The fraction of steam extracted for regeneration and the thermal efficiency of the cycle are to be determined.

Assumptions **1** Steady operating conditions exist. **2** Kinetic and potential energy changes are negligible.

Analysis (*a*) From the steam tables (Tables A-4, A-5, and A-6),

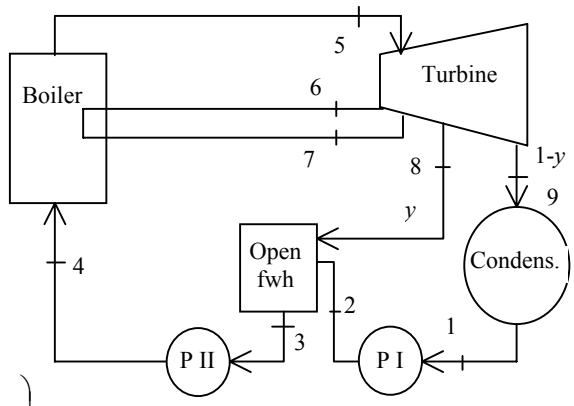

$$h_1 = h_{f\,@\,15\text{ kPa}} = 225.94 \text{ kJ/kg}$$
$$v_1 = v_{f\,@\,15\text{ kPa}} = 0.001014 \text{ m}^3\text{/kg}$$

$$w_{\text{pI,in}} = v_1(P_2 - P_1) = (0.001014 \text{ m}^3\text{/kg})(600 - 15 \text{ kPa})\left(\frac{1 \text{ kJ}}{1 \text{ kPa}\cdot\text{m}^3}\right) = 0.59 \text{ kJ/kg}$$

$$h_2 = h_1 + w_{\text{pI,in}} = 225.94 + 0.59 = 226.53 \text{ kJ/kg}$$

$$\left.\begin{array}{l} P_3 = 0.6 \text{ MPa} \\ \text{sat. liquid} \end{array}\right\} \begin{array}{l} h_3 = h_{f\,@\,0.6\text{ MPa}} = 670.38 \text{ kJ/kg} \\ v_3 = v_{f\,@\,0.6\text{ MPa}} = 0.001101 \text{ m}^3\text{/kg} \end{array}$$

$$w_{\text{pII,in}} = v_3(P_4 - P_3) = (0.001101 \text{ m}^3\text{/kg})(10{,}000 - 600 \text{ kPa})\left(\frac{1 \text{ kJ}}{1 \text{ kPa}\cdot\text{m}^3}\right) = 10.35 \text{ kJ/kg}$$

$$h_4 = h_3 + w_{\text{pII,in}} = 670.38 + 10.35 = 680.73 \text{ kJ/kg}$$

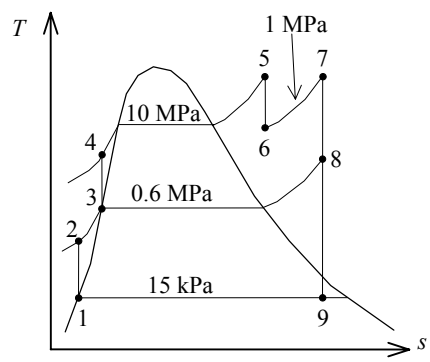

$$\left.\begin{array}{l} P_5 = 10 \text{ MPa} \\ T_5 = 500°\text{C} \end{array}\right\} \begin{array}{l} h_5 = 3375.1 \text{ kJ/kg} \\ s_5 = 6.5995 \text{ kJ/kg}\cdot\text{K} \end{array}$$

$$\left.\begin{array}{l} P_6 = 1.0 \text{ MPa} \\ s_6 = s_5 \end{array}\right\} h_6 = 2783.8 \text{ kJ/kg}$$

$$\left.\begin{array}{l} P_7 = 1.0 \text{ MPa} \\ T_7 = 500°\text{C} \end{array}\right\} \begin{array}{l} h_7 = 3479.1 \text{ kJ/kg} \\ s_7 = 7.7642 \text{ kJ/kg}\cdot\text{K} \end{array}$$

$$\left.\begin{array}{l} P_8 = 0.6 \text{ MPa} \\ s_8 = s_7 \end{array}\right\} h_8 = 3310.2 \text{ kJ/kg}$$

$$\left.\begin{array}{l} P_9 = 15 \text{ kPa} \\ s_9 = s_7 \end{array}\right\} \begin{array}{l} x_9 = \dfrac{s_9 - s_f}{s_{fg}} = \dfrac{7.7642 - 0.7549}{7.2522} = 0.9665 \\ h_9 = h_f + x_9 h_{fg} = 225.94 + (0.9665)(2372.3) = 2518.8 \text{ kJ/kg} \end{array}$$

The fraction of steam extracted is determined from the steady-flow energy balance equation applied to the feedwater heaters. Noting that $\dot{Q} \cong \dot{W} \cong \Delta\text{ke} \cong \Delta\text{pe} \cong 0$,

$$\dot{E}_{\text{in}} - \dot{E}_{\text{out}} = \Delta\dot{E}_{\text{system}}^{\nearrow 0\,(\text{steady})} = 0 \;\rightarrow\; \dot{E}_{\text{in}} = \dot{E}_{\text{out}}$$

$$\sum \dot{m}_i h_i = \sum \dot{m}_e h_e \longrightarrow \dot{m}_8 h_8 + \dot{m}_2 h_2 = \dot{m}_3 h_3 \longrightarrow y h_8 + (1-y) h_2 = 1(h_3)$$

where y is the fraction of steam extracted from the turbine ($= \dot{m}_8 / \dot{m}_3$). Solving for y,

$$y = \frac{h_3 - h_2}{h_8 - h_2} = \frac{670.38 - 226.53}{3310.2 - 226.53} = \mathbf{0.144}$$

(*b*) The thermal efficiency is determined from

$$q_{\text{in}} = (h_5 - h_4) + (h_7 - h_6) = (3375.1 - 680.73) + (3479.1 - 2783.8) = 3389.7 \text{ kJ/kg}$$
$$q_{\text{out}} = (1-y)(h_9 - h_1) = (1 - 0.1440)(2518.8 - 225.94) = 1962.7 \text{ kJ/kg}$$

and $$\eta_{\text{th}} = 1 - \frac{q_{\text{out}}}{q_{\text{in}}} = 1 - \frac{1962.7 \text{ kJ/kg}}{3389.7 \text{ kJ/kg}} = \mathbf{42.1\%}$$

10-96 A nonideal reheat-regenerative Rankine cycle with one open feedwater heater is considered. The fraction of steam extracted for regeneration and the thermal efficiency of the cycle are to be determined.

Assumptions **1** Steady operating conditions exist. **2** Kinetic and potential energy changes are negligible.

Analysis

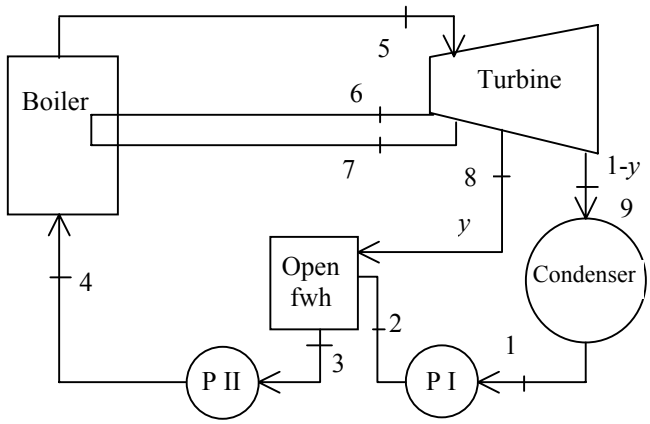

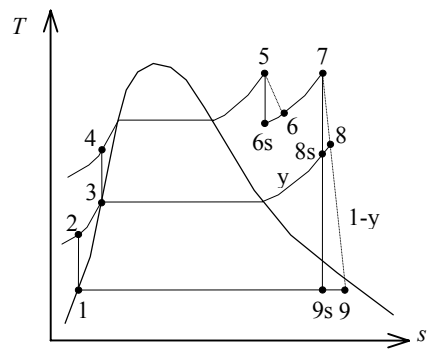

(*a*) From the steam tables (Tables A-4, A-5, and A-6),

$$h_1 = h_{f@\,15\text{ kPa}} = 225.94 \text{ kJ/kg}$$
$$v_1 = v_{f@\,15\text{ kPa}} = 0.001014 \text{ m}^3\text{/kg}$$

$$\begin{aligned} w_{pI,\text{in}} &= v_1(P_2 - P_1) \\ &= (0.001014 \text{ m}^3\text{/kg})(600 - 15 \text{ kPa})\left(\frac{1 \text{ kJ}}{1 \text{ kPa}\cdot\text{m}^3}\right) \\ &= 0.59 \text{ kJ/kg} \end{aligned}$$
$$h_2 = h_1 + w_{pI,\text{in}} = 225.94 + 0.59 = 226.54 \text{ kJ/kg}$$

$$\left.\begin{array}{l} P_3 = 0.6 \text{ MPa} \\ \text{sat. liquid} \end{array}\right\} \begin{array}{l} h_3 = h_{f@\,0.6\text{ MPa}} = 670.38 \text{ kJ/kg} \\ v_3 = v_{f@\,0.6\text{ MPa}} = 0.001101 \text{ m}^3\text{/kg} \end{array}$$

$$\begin{aligned} w_{\text{pII,in}} &= v_3(P_4 - P_3) \\ &= (0.001101 \text{ m}^3\text{/kg})(10{,}000 - 600 \text{ kPa})\left(\frac{1 \text{ kJ}}{1 \text{ kPa}\cdot\text{m}^3}\right) \\ &= 10.35 \text{ kJ/kg} \end{aligned}$$
$$h_4 = h_3 + w_{\text{pII,in}} = 670.38 + 10.35 = 680.73 \text{ kJ/kg}$$

$$\left.\begin{array}{l} P_5 = 10 \text{ MPa} \\ T_5 = 500°\text{C} \end{array}\right\} \begin{array}{l} h_5 = 3375.1 \text{ kJ/kg} \\ s_5 = 6.5995 \text{ kJ/kg}\cdot\text{K} \end{array}$$

$$\left.\begin{array}{l} P_{6s} = 1.0 \text{ MPa} \\ s_{6s} = s_5 \end{array}\right\} h_{6s} = 2783.8 \text{ kJ/kg}$$

$$\eta_T = \frac{h_5 - h_6}{h_5 - h_{6s}} \longrightarrow \begin{aligned} h_6 &= h_5 - \eta_T(h_5 - h_{6s}) \\ &= 3375.1 - (0.84)(3375.1 - 2783.8) \\ &= 2878.4 \text{ kJ/kg} \end{aligned}$$

$$\left.\begin{array}{l} P_7 = 1.0 \text{ MPa} \\ T_7 = 500°\text{C} \end{array}\right\} \begin{array}{l} h_7 = 3479.1 \text{ kJ/kg} \\ s_7 = 7.7642 \text{ kJ/kg}\cdot\text{K} \end{array}$$

$$\left.\begin{array}{l} P_{8s} = 0.6 \text{ MPa} \\ s_{8s} = s_7 \end{array}\right\} h_{8s} = 3310.2 \text{ kJ/kg}$$

$$\eta_T = \frac{h_7 - h_8}{h_7 - h_{8s}} \longrightarrow \begin{array}{l} h_8 = h_7 - \eta_T(h_7 - h_{8s}) = 3479.1 - (0.84)(3479.1 - 3310.2) \\ \quad = 3337.2 \text{ kJ/kg} \end{array}$$

$$\left.\begin{array}{l} P_{9s} = 15 \text{ kPa} \\ s_{9s} = s_7 \end{array}\right\} \begin{array}{l} x_{9s} = \dfrac{s_{9s} - s_f}{s_{fg}} = \dfrac{7.7642 - 0.7549}{7.2522} = 0.9665 \\ h_{9s} = h_f + x_{9s} h_{fg} = 225.94 + (0.9665)(2372.3) = 2518.8 \text{ kJ/kg} \end{array}$$

$$\eta_T = \frac{h_7 - h_9}{h_7 - h_{9s}} \longrightarrow \begin{array}{l} h_9 = h_7 - \eta_T(h_7 - h_{9s}) = 3479.1 - (0.84)(3479.1 - 2518.8) \\ \quad = 2672.5 \text{ kJ/kg} \end{array}$$

The fraction of steam extracted is determined from the steady-flow energy balance equation applied to the feedwater heaters. Noting that $\dot{Q} \cong \dot{W} \cong \Delta\text{ke} \cong \Delta\text{pe} \cong 0$,

$$\begin{aligned} \dot{E}_{\text{in}} - \dot{E}_{\text{out}} &= \Delta\dot{E}_{\text{system}}^{\nearrow 0 \text{ (steady)}} = 0 \\ \dot{E}_{\text{in}} &= \dot{E}_{\text{out}} \\ \sum \dot{m}_i h_i &= \sum \dot{m}_e h_e \longrightarrow \dot{m}_8 h_8 + \dot{m}_2 h_2 = \dot{m}_3 h_3 \longrightarrow y h_8 + (1-y) h_2 = 1(h_3) \end{aligned}$$

where y is the fraction of steam extracted from the turbine ($= \dot{m}_8 / \dot{m}_3$). Solving for y,

$$y = \frac{h_3 - h_2}{h_8 - h_2} = \frac{670.38 - 226.53}{3335.3 - 226.53} = \mathbf{0.1427}$$

(*b*) The thermal efficiency is determined from

$$\begin{aligned} q_{\text{in}} &= (h_5 - h_4) + (h_7 - h_6) \\ &= (3375.1 - 680.73) + (3479.1 - 2878.4) = 3295.1 \text{ kJ/kg} \\ q_{\text{out}} &= (1-y)(h_9 - h_1) = (1 - 0.1427)(2672.5 - 225.94) = 2097.2 \text{ kJ/kg} \end{aligned}$$

and

$$\eta_{\text{th}} = 1 - \frac{q_{\text{out}}}{q_{\text{in}}} = 1 - \frac{2097.2 \text{ kJ/kg}}{3295.1 \text{ kJ/kg}} = \mathbf{36.4\%}$$

10-97 A steam power plant operates on an ideal reheat-regenerative Rankine cycle with one reheater and two feedwater heaters, one open and one closed. The fraction of steam extracted from the turbine for the open feedwater heater, the thermal efficiency of the cycle, and the net power output are to be determined.

Assumptions **1** Steady operating conditions exist. **2** Kinetic and potential energy changes are negligible.

Analysis

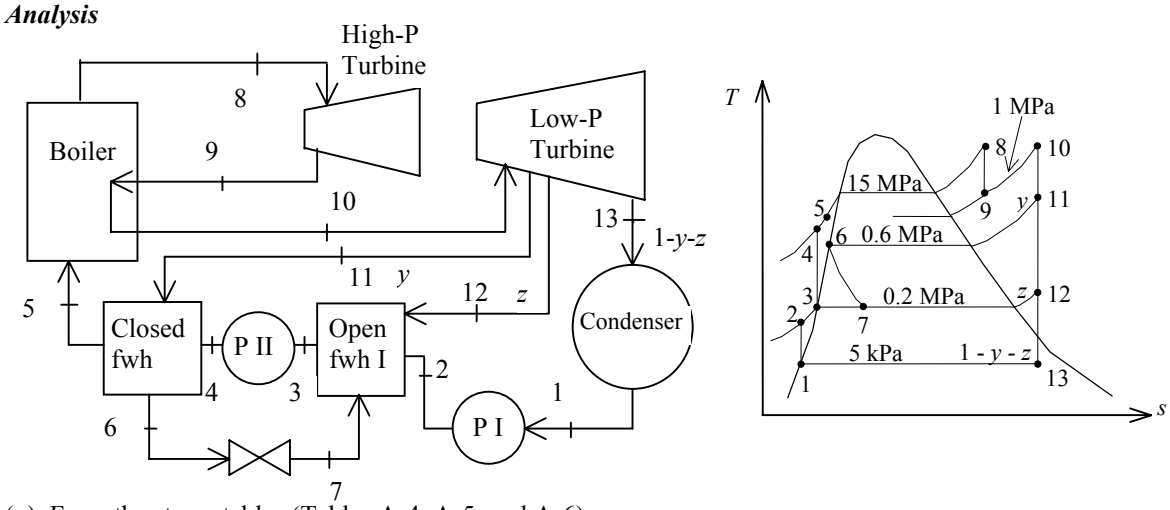

(*a*) From the steam tables (Tables A-4, A-5, and A-6),

$$h_1 = h_{f\ @\ 5\ \text{kPa}} = 137.75\ \text{kJ/kg}$$
$$v_1 = v_{f\ @\ 5\ \text{kPa}} = 0.001005\ \text{m}^3/\text{kg}$$

$$w_{\text{pI,in}} = v_1(P_2 - P_1) = (0.001005\ \text{m}^3/\text{kg})(200 - 5\ \text{kPa})\left(\frac{1\ \text{kJ}}{1\ \text{kPa}\cdot\text{m}^3}\right) = 0.20\ \text{kJ/kg}$$

$$h_2 = h_1 + w_{\text{pI,in}} = 137.75 + 0.20 = 137.95\ \text{kJ/kg}$$

$$\left.\begin{array}{l} P_3 = 0.2\ \text{MPa} \\ \text{sat.liquid} \end{array}\right\} \begin{array}{l} h_3 = h_{f\ @\ 0.2\ \text{MPa}} = 504.71\ \text{kJ/kg} \\ v_3 = v_{f\ @\ 0.2\ \text{MPa}} = 0.001061\ \text{m}^3/\text{kg} \end{array}$$

$$w_{\text{pII,in}} = v_3(P_4 - P_3) = (0.001061\ \text{m}^3/\text{kg})(15{,}000 - 200\ \text{kPa})\left(\frac{1\ \text{kJ}}{1\ \text{kPa}\cdot\text{m}^3}\right) = 15.70\ \text{kJ/kg}$$

$$h_4 = h_3 + w_{\text{pII,in}} = 504.71 + 15.70 = 520.41\ \text{kJ/kg}$$

$$\left.\begin{array}{l} P_6 = 0.6\ \text{MPa} \\ \text{sat.liquid} \end{array}\right\} \begin{array}{l} h_6 = h_7 = h_{f\ @\ 0.6\ \text{MPa}} = 670.38\ \text{kJ/kg} \\ v_6 = v_{f\ @\ 0.6\ \text{MPa}} = 0.001101\ \text{m}^3/\text{kg} \end{array}$$

$$T_6 = T_5 \longrightarrow h_5 = h_6 + v_6(P_5 - P_6) = 670.38 + (0.001101\ \text{m}^3/\text{kg})(15{,}000 - 600\ \text{kPa})\left(\frac{1\ \text{kJ}}{1\ \text{kPa}\cdot\text{m}^3}\right) = 686.23\ \text{kJ/kg}$$

$$\left.\begin{array}{l} P_8 = 15\ \text{MPa} \\ T_8 = 600°\text{C} \end{array}\right\} \begin{array}{l} h_8 = 3583.1\ \text{kJ/kg} \\ s_8 = 6.6796\ \text{kJ/kg}\cdot\text{K} \end{array}$$

$$\left.\begin{array}{l} P_9 = 1.0\ \text{MPa} \\ s_9 = s_8 \end{array}\right\} h_9 = 2820.8\ \text{kJ/kg}$$

$$\left.\begin{array}{l} P_{10} = 1.0\ \text{MPa} \\ T_{10} = 500°\text{C} \end{array}\right\} \begin{array}{l} h_{10} = 3479.1\ \text{kJ/kg} \\ s_{10} = 7.7642\ \text{kJ/kg}\cdot\text{K} \end{array}$$

$$\left.\begin{array}{l} P_{11} = 0.6 \text{ MPa} \\ s_{11} = s_{10} \end{array}\right\} h_{11} = 3310.2 \text{ kJ/kg}$$

$$\left.\begin{array}{l} P_{12} = 0.2 \text{ MPa} \\ s_{12} = s_{10} \end{array}\right\} h_{12} = 3000.9 \text{ kJ/kg}$$

$$\left.\begin{array}{l} P_{13} = 5 \text{ kPa} \\ s_{13} = s_{10} \end{array}\right\} \begin{array}{l} x_{13} = \dfrac{s_{13} - s_f}{s_{fg}} = \dfrac{7.7642 - 0.4762}{7.9176} \\ \quad = 0.9205 \\ h_{13} = h_f + x_{13} h_{fg} \\ \quad = 137.75 + (0.9205)(2423.0) \\ \quad = 2368.1 \text{ kJ/kg} \end{array}$$

The fraction of steam extracted is determined from the steady-flow energy balance equation applied to the feedwater heaters. Noting that $\dot{Q} \cong \dot{W} \cong \Delta\text{ke} \cong \Delta\text{pe} \cong 0$,

$$\dot{E}_{\text{in}} - \dot{E}_{\text{out}} = \Delta\dot{E}_{\text{system}}^{\nearrow 0 \text{ (steady)}} = 0$$

$$\dot{E}_{\text{in}} = \dot{E}_{\text{out}}$$

$$\sum \dot{m}_i h_i = \sum \dot{m}_e h_e \longrightarrow \dot{m}_{11}(h_{11} - h_6) = \dot{m}_5(h_5 - h_4) \longrightarrow y(h_{11} - h_6) = (h_5 - h_4)$$

where y is the fraction of steam extracted from the turbine ($= \dot{m}_{11} / \dot{m}_5$). Solving for y,

$$y = \frac{h_5 - h_4}{h_{11} - h_6} = \frac{686.23 - 520.41}{3310.2 - 670.38} = 0.06287$$

For the open FWH,

$$\dot{E}_{\text{in}} - \dot{E}_{\text{out}} = \Delta\dot{E}_{\text{system}}^{\nearrow 0 \text{ (steady)}} = 0$$

$$\dot{E}_{\text{in}} = \dot{E}_{\text{out}}$$

$$\sum \dot{m}_i h_i = \sum \dot{m}_e h_e$$

$$\dot{m}_7 h_7 + \dot{m}_2 h_2 + \dot{m}_{12} h_{12} = \dot{m}_3 h_3$$

$$y h_7 + (1 - y - z) h_2 + z h_{12} = (1) h_3$$

where z is the fraction of steam extracted from the turbine ($= \dot{m}_{12} / \dot{m}_5$) at the second stage. Solving for z,

$$z = \frac{(h_3 - h_2) - y(h_7 - h_2)}{h_{12} - h_2} = \frac{504.71 - 137.95 - (0.06287)(670.38 - 137.95)}{3000.0 - 137.95} = \mathbf{0.1165}$$

(*b*)

$$\begin{aligned} q_{\text{in}} &= (h_8 - h_5) + (h_{10} - h_9) \\ &= (3583.1 - 686.23) + (3479.1 - 2820.8) = 3555.3 \text{ kJ/kg} \\ q_{\text{out}} &= (1 - y - z)(h_{13} - h_1) = (1 - 0.06287 - 0.1165)(2368.0 - 137.75) = 1830.4 \text{ kJ/kg} \\ w_{\text{net}} &= q_{\text{in}} - q_{\text{out}} = 3555.3 - 1830.4 = 1724.9 \text{ kJ/kg} \end{aligned}$$

and

$$\eta_{\text{th}} = 1 - \frac{q_{\text{out}}}{q_{\text{in}}} = 1 - \frac{1830.4 \text{ kJ/kg}}{3555.3 \text{ kJ/kg}} = \mathbf{48.5\%}$$

(*c*)

$$\dot{W}_{\text{net}} = \dot{m} w_{\text{net}} = (42 \text{ kg/s})(1724.9 \text{ kJ/kg}) = \mathbf{72{,}447 \text{ kW}}$$

10-98 A cogeneration power plant is modified with reheat and that produces 3 MW of power and supplies 7 MW of process heat. The rate of heat input in the boiler and the fraction of steam extracted for process heating are to be determined.

Assumptions **1** Steady operating conditions exist. **2** Kinetic and potential energy changes are negligible.

Analysis (*a*) From the steam tables (Tables A-4, A-5, and A-6),

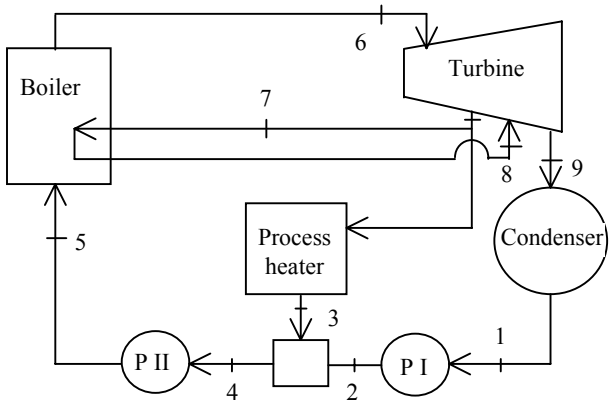

$$h_1 = h_{f\ @\ 15\ \text{kPa}} = 225.94\ \text{kJ/kg}$$
$$h_2 \cong h_1$$
$$h_3 = h_{f\ @\ 120\,°\text{C}} = 503.81\ \text{kJ/kg}$$

$$\left.\begin{array}{l} P_6 = 8\ \text{MPa} \\ T_6 = 500°\text{C} \end{array}\right\} \begin{array}{l} h_6 = 3399.5\ \text{kJ/kg} \\ s_6 = 6.7266\ \text{kJ/kg}\cdot\text{K} \end{array}$$

$$\left.\begin{array}{l} P_7 = 1\ \text{MPa} \\ s_7 = s_6 \end{array}\right\} h_7 = 2843.7\ \text{kJ/kg}$$

$$\left.\begin{array}{l} P_8 = 1\ \text{MPa} \\ T_8 = 500°\text{C} \end{array}\right\} \begin{array}{l} h_8 = 3479.1\ \text{kJ/kg} \\ s_8 = 7.7642\ \text{kJ/kg}\cdot\text{K} \end{array}$$

$$x_9 = \frac{s_9 - s_f}{s_{fg}} = \frac{7.7642 - 0.7549}{7.2522} = 0.9665$$

$$\left.\begin{array}{l} P_9 = 15\ \text{kPa} \\ s_9 = s_8 \end{array}\right\} \begin{array}{l} h_9 = h_f + x_9 h_{fg} = 225.94 + (0.9665)(2372.3) \\ \quad = 2518.8\ \text{kJ/kg} \end{array}$$

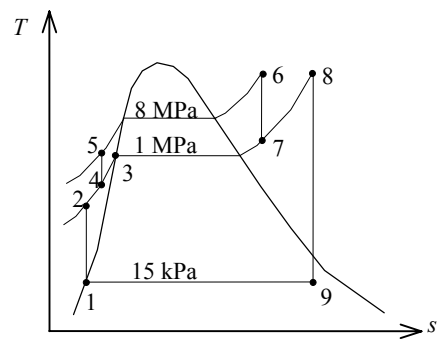

The mass flow rate through the process heater is

$$\dot{m}_3 = \frac{\dot{Q}_{\text{process}}}{h_7 - h_3} = \frac{7{,}000\ \text{kJ/s}}{(2843.7 - 503.81)\ \text{kJ/kg}} = 2.992\ \text{kg/s}$$

Also,

$$\dot{W}_T = \dot{m}_6(h_6 - h_7) + \dot{m}_9(h_8 - h_9) = \dot{m}_6(h_6 - h_7) + (\dot{m}_6 - 2.993)(h_8 - h_9)$$

or,

$$3000\ \text{kJ/s} = \dot{m}_6(3399.5 - 2843.7) + (\dot{m}_6 - 2.992)(3479.1 - 2518.8)$$

It yields $\dot{m}_6 = 3.873\ \text{kg/s}$

and $\dot{m}_9 = \dot{m}_6 - \dot{m}_3 = 3.873 - 2.992 = 0.881\ \text{kg/s}$

Mixing chamber:

$$\dot{E}_{\text{in}} - \dot{E}_{\text{out}} = \Delta\dot{E}_{\text{system}}^{\nearrow 0\ (\text{steady})} = 0$$
$$\dot{E}_{\text{in}} = \dot{E}_{\text{out}}$$
$$\sum \dot{m}_i h_i = \sum \dot{m}_e h_e \quad \longrightarrow \quad \dot{m}_4 h_4 = \dot{m}_2 h_2 + \dot{m}_3 h_3$$

or,
$$h_4 \cong h_5 = \frac{\dot{m}_2 h_2 + \dot{m}_3 h_3}{\dot{m}_4} = \frac{(0.881)(225.94) + (2.992)(503.81)}{3.873} = 440.60\ \text{kJ/kg}$$

Then,

$$\begin{aligned} \dot{Q}_{\text{in}} &= \dot{m}_6(h_6 - h_5) + \dot{m}_8(h_8 - h_7) \\ &= (3.873\ \text{kg/s})(3399.5 - 440.60\ \text{kJ/kg}) + (0.881\ \text{kg/s})(3479.1 - 2843.7\ \text{kJ/kg}) \\ &= \mathbf{12{,}020\ \ kW} \end{aligned}$$

(*b*) The fraction of steam extracted for process heating is

$$y = \frac{\dot{m}_3}{\dot{m}_{\text{total}}} = \frac{2.992\ \text{kg/s}}{3.873\ \text{kg/s}} = \mathbf{77.3\%}$$