10-46 A steam power plant operates on an ideal regenerative Rankine cycle with two open feedwater heaters. The net power output of the power plant and the thermal efficiency of the cycle are to be determined.

Assumptions **1** Steady operating conditions exist. **2** Kinetic and potential energy changes are negligible.

Analysis

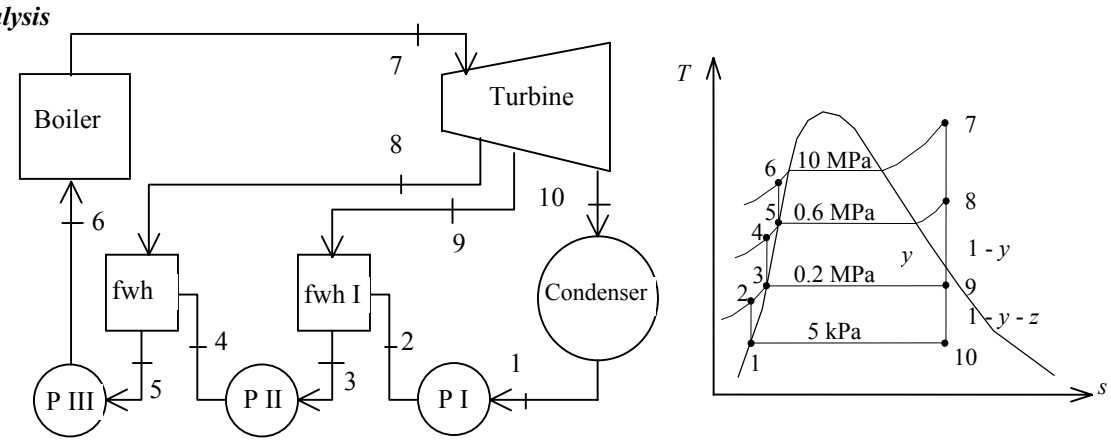

(*a*) From the steam tables (Tables A-4, A-5, and A-6),

$$h_1 = h_{f@\,5\text{ kPa}} = 137.75 \text{ kJ/kg}$$

$$v_1 = v_{f@\,5\text{ kPa}} = 0.001005 \text{ m}^3/\text{kg}$$

$$w_{pI,\text{in}} = v_1(P_2 - P_1) = (0.001005 \text{ m}^3/\text{kg})(200 - 5 \text{ kPa})\left(\frac{1 \text{ kJ}}{1 \text{ kPa}\cdot\text{m}^3}\right) = 0.20 \text{ kJ/kg}$$

$$h_2 = h_1 + w_{pI,\text{in}} = 137.75 + 0.20 = 137.95 \text{ kJ/kg}$$

$$\left.\begin{array}{l} P_3 = 0.2 \text{ MPa} \\ \text{sat.liquid} \end{array}\right\} \begin{array}{l} h_3 = h_{f@\,0.2\text{ MPa}} = 504.71 \text{ kJ/kg} \\ v_3 = v_{f@\,0.2\text{ MPa}} = 0.001061 \text{ m}^3/\text{kg} \end{array}$$

$$w_{pII,\text{in}} = v_3(P_4 - P_3) = (0.001061 \text{ m}^3/\text{kg})(600 - 200 \text{ kPa})\left(\frac{1 \text{ kJ}}{1 \text{ kPa}\cdot\text{m}^3}\right)$$
$$= 0.42 \text{ kJ/kg}$$

$$h_4 = h_3 + w_{pII,\text{in}} = 504.71 + 0.42 = 505.13 \text{ kJ/kg}$$

$$\left.\begin{array}{l} P_5 = 0.6 \text{ MPa} \\ \text{sat.liquid} \end{array}\right\} \begin{array}{l} h_5 = h_{f@\,0.6\text{ MPa}} = 670.38 \text{ kJ/kg} \\ v_5 = v_{f@\,0.6\text{ MPa}} = 0.001101 \text{ m}^3/\text{kg} \end{array}$$

$$w_{pIII,\text{in}} = v_5(P_6 - P_5) = (0.001101 \text{ m}^3/\text{kg})(10{,}000 - 600 \text{ kPa})\left(\frac{1 \text{ kJ}}{1 \text{ kPa}\cdot\text{m}^3}\right)$$
$$= 10.35 \text{ kJ/kg}$$

$$h_6 = h_5 + w_{pIII,\text{in}} = 670.38 + 10.35 = 680.73 \text{ kJ/kg}$$

$$\left.\begin{array}{l} P_7 = 10 \text{ MPa} \\ T_7 = 600°\text{C} \end{array}\right\} \begin{array}{l} h_7 = 3625.8 \text{ kJ/kg} \\ s_7 = 6.9045 \text{ kJ/kg}\cdot\text{K} \end{array}$$

$$\left.\begin{array}{l} P_8 = 0.6 \text{ MPa} \\ s_8 = s_7 \end{array}\right\} h_8 = 2821.8 \text{ kJ/kg}$$

$$x_9 = \frac{s_9 - s_f}{s_{fg}} = \frac{6.9045 - 1.5302}{5.5968} = 0.9602$$

$$\left.\begin{array}{l} P_9 = 0.2 \text{ MPa} \\ s_9 = s_7 \end{array}\right\} \begin{array}{l} h_9 = h_f + x_9 h_{fg} = 504.71 + (0.9602)(2201.6) \\ = 2618.7 \text{ kJ/kg} \end{array}$$

$$\left.\begin{array}{l} P_{10} = 5 \text{ kPa} \\ s_{10} = s_7 \end{array}\right\} \begin{array}{l} x_{10} = \dfrac{s_{10} - s_f}{s_{fg}} = \dfrac{6.9045 - 0.4762}{7.9176} = 0.8119 \\ h_{10} = h_f + x_{10} h_{fg} = 137.75 + (0.8119)(2423.0) = 2105.0 \text{ kJ/kg} \end{array}$$

The fraction of steam extracted is determined from the steady-flow energy balance equation applied to the feedwater heaters. Noting that $\dot{Q} \cong \dot{W} \cong \Delta\text{ke} \cong \Delta\text{pe} \cong 0$,

$$\dot{E}_{\text{in}} - \dot{E}_{\text{out}} = \Delta\dot{E}_{system}^{\nearrow 0 \text{ (steady)}} = 0$$

FWH-2:

$$\dot{E}_{\text{in}} = \dot{E}_{\text{out}}$$

$$\sum \dot{m}_i h_i = \sum \dot{m}_e h_e \longrightarrow \dot{m}_8 h_8 + \dot{m}_4 h_4 = \dot{m}_5 h_5 \longrightarrow y h_8 + (1-y) h_4 = 1(h_5)$$

where y is the fraction of steam extracted from the turbine ($= \dot{m}_8 / \dot{m}_5$). Solving for y,

$$y = \frac{h_5 - h_4}{h_8 - h_4} = \frac{670.38 - 505.13}{2821.8 - 505.13} = 0.07133$$

FWH-1: $\sum \dot{m}_i h_i = \sum \dot{m}_e h_e \longrightarrow \dot{m}_9 h_9 + \dot{m}_2 h_2 = \dot{m}_3 h_3 \longrightarrow z h_9 + (1 - y - z) h_2 = (1 - y) h_3$

where z is the fraction of steam extracted from the turbine ($= \dot{m}_9 / \dot{m}_5$) at the second stage. Solving for z,

$$z = \frac{h_3 - h_2}{h_9 - h_2}(1 - y) = \frac{504.71 - 137.95}{2618.7 - 137.95}(1 - 0.07136) = 0.1373$$

Then,

$$\begin{aligned} q_{\text{in}} &= h_7 - h_6 = 3625.8 - 680.73 = 2945.0 \text{ kJ/kg} \\ q_{\text{out}} &= (1 - y - z)(h_{10} - h_1) = (1 - 0.07133 - 0.1373)(2105.0 - 137.75) = 1556.8 \text{ kJ/kg} \\ w_{\text{net}} &= q_{\text{in}} - q_{\text{out}} = 2945.0 - 1556.8 = 1388.2 \text{ kJ/kg} \end{aligned}$$

and

$$\dot{W}_{\text{net}} = \dot{m} w_{\text{net}} = (22 \text{ kg/s})(1388.2 \text{ kJ/kg}) = 30{,}540 \text{ kW} \cong \mathbf{30.5\ MW}$$

(*b*) $$\eta_{\text{th}} = 1 - \frac{q_{\text{out}}}{q_{\text{in}}} = 1 - \frac{1556.8 \text{ kJ/kg}}{2945.0 \text{ kJ/kg}} = \mathbf{47.1\%}$$

10-47 [*Also solved by EES on enclosed CD*] A steam power plant operates on an ideal regenerative Rankine cycle with two feedwater heaters, one closed and one open. The mass flow rate of steam through the boiler for a net power output of 250 MW and the thermal efficiency of the cycle are to be determined.

Assumptions **1** Steady operating conditions exist. **2** Kinetic and potential energy changes are negligible.

Analysis (*a*) From the steam tables (Tables A-4, A-5, and A-6),

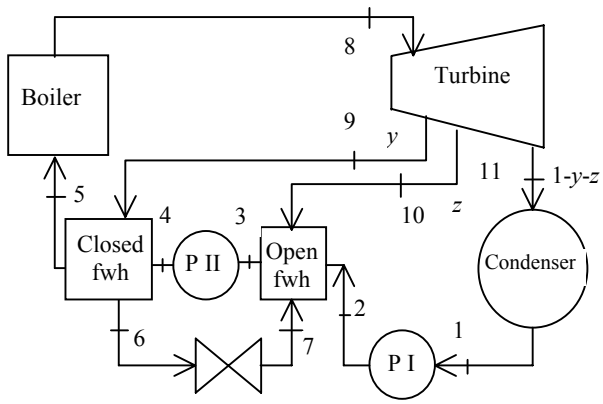

$$h_1 = h_{f@\,10\text{ kPa}} = 191.81 \text{ kJ/kg}$$
$$v_1 = v_{f@\,10\text{ kPa}} = 0.00101 \text{ m}^3\text{/kg}$$

$$w_{pI,\text{in}} = v_1(P_2 - P_1)$$
$$= (0.00101 \text{ m}^3\text{/kg})(300 - 10 \text{ kPa})\left(\frac{1 \text{ kJ}}{1 \text{ kPa}\cdot\text{m}^3}\right)$$
$$= 0.29 \text{ kJ/kg}$$
$$h_2 = h_1 + w_{pI,\text{in}} = 191.81 + 0.29 = 192.10 \text{ kJ/kg}$$

$$\left.\begin{array}{l} P_3 = 0.3 \text{ MPa} \\ \text{sat. liquid} \end{array}\right\} \begin{array}{l} h_3 = h_{f@\,0.3\text{ MPa}} = 561.43 \text{ kJ/kg} \\ v_3 = v_{f@\,0.3\text{ MPa}} = 0.001073 \text{ m}^3\text{/kg} \end{array}$$

$$w_{pII,\text{in}} = v_3(P_4 - P_3)$$
$$= (0.001073 \text{ m}^3\text{/kg})(12{,}500 - 300 \text{ kPa})\left(\frac{1 \text{ kJ}}{1 \text{ kPa}\cdot\text{m}^3}\right)$$
$$= 13.09 \text{ kJ/kg}$$
$$h_4 = h_3 + w_{pII,\text{in}} = 561.43 + 13.09 = 574.52 \text{ kJ/kg}$$

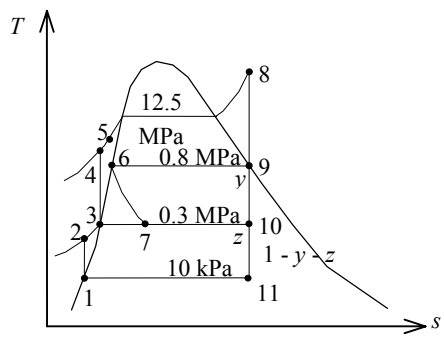

$$\left.\begin{array}{l} P_6 = 0.8 \text{ MPa} \\ \text{sat. liquid} \end{array}\right\} \begin{array}{l} h_6 = h_7 = h_{f@\,0.8\text{ MPa}} = 720.87 \text{ kJ/kg} \\ v_6 = v_{f@\,0.8\text{ MPa}} = 0.001115 \text{ m}^3\text{/kg} \\ T_6 = T_{\text{sat@ }0.8\text{ MPa}} = 170.4°\text{C} \end{array}$$

$$T_6 = T_5,\ P_5 = 12.5 \text{ MPa} \rightarrow h_5 = 727.83 \text{ kJ/kg}$$

$$\left.\begin{array}{l} P_8 = 12.5 \text{ MPa} \\ T_8 = 550°\text{C} \end{array}\right\} \begin{array}{l} h_8 = 3476.5 \text{ kJ/kg} \\ s_8 = 6.6317 \text{ kJ/kg}\cdot\text{K} \end{array}$$

$$\left.\begin{array}{l} P_9 = 0.8 \text{ MPa} \\ s_9 = s_8 \end{array}\right\} \begin{array}{l} x_9 = \dfrac{s_9 - s_f}{s_{fg}} = \dfrac{6.6317 - 2.0457}{4.6160} = 0.9935 \\ h_9 = h_f + x_9 h_{fg} = 720.87 + (0.9935)(2047.5) = 2755.0 \text{ kJ/kg} \end{array}$$

$$\left.\begin{array}{l} P_{10} = 0.3 \text{ MPa} \\ s_{10} = s_8 \end{array}\right\} \begin{array}{l} x_{10} = \dfrac{s_{10} - s_f}{s_{fg}} = \dfrac{6.6317 - 1.6717}{5.3200} = 0.9323 \\ h_{10} = h_f + x_{10} h_{fg} = 561.43 + (0.9323)(2163.5) = 2578.5 \text{ kJ/kg} \end{array}$$

$$\left.\begin{array}{l} P_{11} = 10 \text{ kPa} \\ s_{11} = s_8 \end{array}\right\} \begin{array}{l} x_{11} = \dfrac{s_{11} - s_f}{s_{fg}} = \dfrac{6.6317 - 0.6492}{7.4996} = 0.7977 \\ h_{11} = h_f + x_{11} h_{fg} = 191.81 + (0.7977)(2392.1) = 2100.0 \text{ kJ/kg} \end{array}$$

The fraction of steam extracted is determined from the steady-flow energy balance equation applied to the feedwater heaters. Noting that $\dot{Q} \cong \dot{W} \cong \Delta\text{ke} \cong \Delta\text{pe} \cong 0$,

$$\dot{E}_{\text{in}} - \dot{E}_{\text{out}} = \Delta\dot{E}_{\text{system}}^{\nearrow 0\text{ (steady)}} = 0$$
$$\dot{E}_{\text{in}} = \dot{E}_{\text{out}}$$
$$\sum \dot{m}_i h_i = \sum \dot{m}_e h_e \longrightarrow \dot{m}_9(h_9 - h_6) = \dot{m}_5(h_5 - h_4) \longrightarrow y(h_9 - h_6) = (h_5 - h_4)$$

where y is the fraction of steam extracted from the turbine ($= \dot{m}_{10} / \dot{m}_5$). Solving for y,

$$y = \frac{h_5 - h_4}{h_9 - h_6} = \frac{727.83 - 574.52}{2755.0 - 720.87} = 0.0753$$

For the open FWH,

$$\dot{E}_{\text{in}} - \dot{E}_{\text{out}} = \Delta\dot{E}_{\text{system}}^{\nearrow 0\,(\text{steady})} = 0$$

$$\dot{E}_{\text{in}} = \dot{E}_{\text{out}}$$

$$\sum \dot{m}_i h_i = \sum \dot{m}_e h_e \longrightarrow \dot{m}_7 h_7 + \dot{m}_2 h_2 + \dot{m}_{10} h_{10} = \dot{m}_3 h_3 \longrightarrow y h_7 + (1 - y - z) h_2 + z h_{10} = (1) h_3$$

where z is the fraction of steam extracted from the turbine ($= \dot{m}_9 / \dot{m}_5$) at the second stage. Solving for z,

$$z = \frac{(h_3 - h_2) - y(h_7 - h_2)}{h_{10} - h_2} = \frac{561.43 - 192.10 - (0.0753)(720.87 - 192.10)}{2578.5 - 192.10} = 0.1381$$

Then,

$$q_{\text{in}} = h_8 - h_5 = 3476.5 - 727.36 = 2749.1 \text{ kJ/kg}$$

$$q_{\text{out}} = (1 - y - z)(h_{11} - h_1) = (1 - 0.0753 - 0.1381)(2100.0 - 191.81) = 1500.1 \text{ kJ/kg}$$

$$w_{\text{net}} = q_{\text{in}} - q_{\text{out}} = 2749.1 - 1500.1 = 1249 \text{ kJ/kg}$$

and

$$\dot{m} = \frac{\dot{W}_{\text{net}}}{w_{\text{net}}} = \frac{250{,}000 \text{ kJ/s}}{1249 \text{ kJ/kg}} = \mathbf{200.2\ kg/s}$$

(*b*) $$\eta_{\text{th}} = 1 - \frac{q_{\text{out}}}{q_{\text{in}}} = 1 - \frac{1500.1 \text{ kJ/kg}}{2749.1 \text{ kJ/kg}} = \mathbf{45.4\%}$$

10-48 EES Problem 10-47 is reconsidered. The effects of turbine and pump efficiencies on the mass flow rate and thermal efficiency are to be investigated. Also, the *T-s* diagram is to be plotted.

Analysis The problem is solved using EES, and the solution is given below.

```
"Input Data"
P[8] = 12500 [kPa]
T[8] = 550 [C]
P[9] = 800 [kPa]
"P_cfwh=300 [kPa]"
P[10] = P_cfwh
P_cond=10 [kPa]
P[11] = P_cond
W_dot_net=250 [MW]*Convert(MW, kW)
Eta_turb= 100/100 "Turbine isentropic efficiency"
Eta_turb_hp = Eta_turb "Turbine isentropic efficiency for high pressure stages"
Eta_turb_ip = Eta_turb "Turbine isentropic efficiency for intermediate pressure stages"
Eta_turb_lp = Eta_turb "Turbine isentropic efficiency for low pressure stages"
Eta_pump = 100/100 "Pump isentropic efficiency"

"Condenser exit pump  or Pump 1 analysis"

Fluid$='Steam_IAPWS'
P[1] = P[11]
P[2]=P[10]
h[1]=enthalpy(Fluid$,P=P[1],x=0)      {Sat'd liquid}
v1=volume(Fluid$,P=P[1],x=0)
s[1]=entropy(Fluid$,P=P[1],x=0)
T[1]=temperature(Fluid$,P=P[1],x=0)
w_pump1_s=v1*(P[2]-P[1])"SSSF isentropic pump work assuming constant specific volume"
w_pump1=w_pump1_s/Eta_pump "Definition of pump efficiency"
h[1]+w_pump1= h[2]  "Steady-flow conservation of energy"
s[2]=entropy(Fluid$,P=P[2],h=h[2])
T[2]=temperature(Fluid$,P=P[2],h=h[2])

"Open Feedwater Heater analysis"
z*h[10] + y*h[7] + (1-y-z)*h[2] = 1*h[3] "Steady-flow conservation of energy"
h[3]=enthalpy(Fluid$,P=P[3],x=0)
T[3]=temperature(Fluid$,P=P[3],x=0) "Condensate leaves heater as sat. liquid at P[3]"
s[3]=entropy(Fluid$,P=P[3],x=0)

"Boiler condensate pump  or Pump 2 analysis"
P[5]=P[8]
P[4] = P[5]
P[3]=P[10]
v3=volume(Fluid$,P=P[3],x=0)
w_pump2_s=v3*(P[4]-P[3])"SSSF isentropic pump work assuming constant specific volume"
w_pump2=w_pump2_s/Eta_pump "Definition of pump efficiency"
h[3]+w_pump2= h[4]  "Steady-flow conservation of energy"
s[4]=entropy(Fluid$,P=P[4],h=h[4])
T[4]=temperature(Fluid$,P=P[4],h=h[4])

"Closed Feedwater Heater analysis"
P[6]=P[9]
 y*h[9] + 1*h[4] = 1*h[5] + y*h[6] "Steady-flow conservation of energy"
h[5]=enthalpy(Fluid$,P=P[6],x=0) "h[5] = h(T[5], P[5]) where T[5]=Tsat at P[9]"
```

```
T[5]=temperature(Fluid$,P=P[5],h=h[5]) "Condensate leaves heater as sat. liquid at P[6]"
s[5]=entropy(Fluid$,P=P[6],h=h[5])
h[6]=enthalpy(Fluid$,P=P[6],x=0)
T[6]=temperature(Fluid$,P=P[6],x=0) "Condensate leaves heater as sat. liquid at P[6]"
s[6]=entropy(Fluid$,P=P[6],x=0)

"Trap analysis"
P[7] = P[10]
y*h[6] = y*h[7]  "Steady-flow conservation of energy for the trap operating as a throttle"
T[7]=temperature(Fluid$,P=P[7],h=h[7])
s[7]=entropy(Fluid$,P=P[7],h=h[7])

"Boiler analysis"
q_in + h[5]=h[8]"SSSF conservation of energy for the Boiler"
h[8]=enthalpy(Fluid$, T=T[8], P=P[8])
s[8]=entropy(Fluid$, T=T[8], P=P[8])

"Turbine analysis"
ss[9]=s[8]
hs[9]=enthalpy(Fluid$,s=ss[9],P=P[9])
Ts[9]=temperature(Fluid$,s=ss[9],P=P[9])
h[9]=h[8]-Eta_turb_hp*(h[8]-hs[9])"Definition of turbine efficiency for high pressure stages"
T[9]=temperature(Fluid$,P=P[9],h=h[9])
s[9]=entropy(Fluid$,P=P[9],h=h[9])
ss[10]=s[8]
hs[10]=enthalpy(Fluid$,s=ss[10],P=P[10])
Ts[10]=temperature(Fluid$,s=ss[10],P=P[10])
h[10]=h[9]-Eta_turb_ip*(h[9]-hs[10])"Definition of turbine efficiency for Intermediate pressure
stages"
T[10]=temperature(Fluid$,P=P[10],h=h[10])
s[10]=entropy(Fluid$,P=P[10],h=h[10])
ss[11]=s[8]
hs[11]=enthalpy(Fluid$,s=ss[11],P=P[11])
Ts[11]=temperature(Fluid$,s=ss[11],P=P[11])
h[11]=h[10]-Eta_turb_lp*(h[10]-hs[11])"Definition of turbine efficiency for low pressure stages"
T[11]=temperature(Fluid$,P=P[11],h=h[11])
s[11]=entropy(Fluid$,P=P[11],h=h[11])
h[8] =y*h[9] + z*h[10] + (1-y-z)*h[11] + w_turb "SSSF conservation of energy for turbine"

"Condenser analysis"
(1-y-z)*h[11]=q_out+(1-y-z)*h[1]"SSSF First Law for the Condenser"

"Cycle Statistics"
w_net=w_turb - ((1-y-z)*w_pump1+ w_pump2)
Eta_th=w_net/q_in
W_dot_net = m_dot * w_net
```

η_{turb}	η_{turb}	η_{th}	m [kg/s]
0.7	0.7	0.3916	231.6
0.75	0.75	0.4045	224.3
0.8	0.8	0.4161	218
0.85	0.85	0.4267	212.6
0.9	0.9	0.4363	207.9
0.95	0.95	0.4452	203.8
1	1	0.4535	200.1

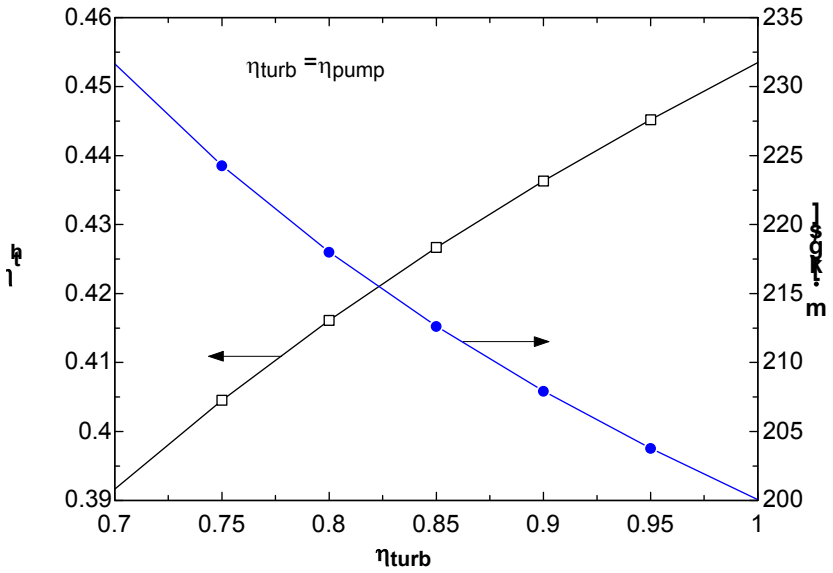

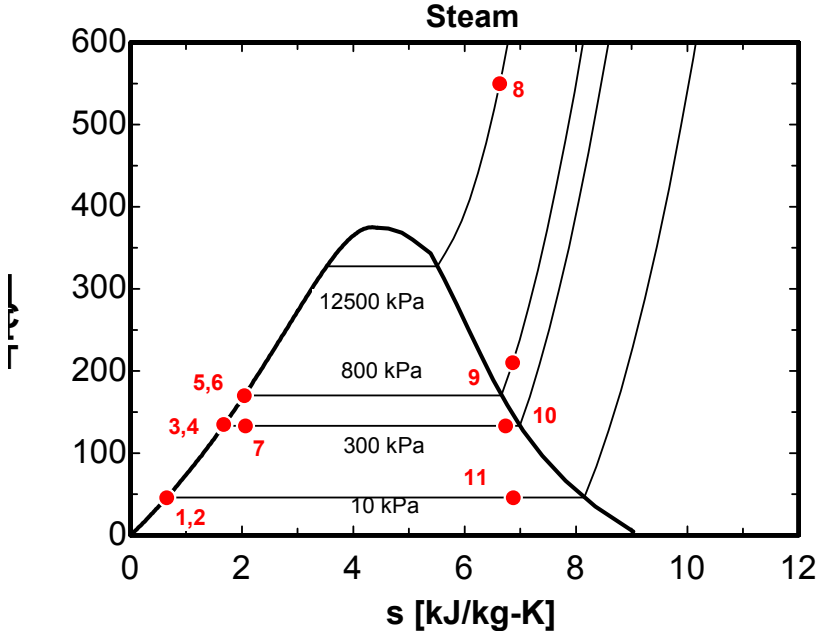

10-49 A steam power plant operates on an ideal reheat-regenerative Rankine cycle with an open feedwater heater. The mass flow rate of steam through the boiler and the thermal efficiency of the cycle are to be determined.

Assumptions **1** Steady operating conditions exist. **2** Kinetic and potential energy changes are negligible.

Analysis (*a*) From the steam tables (Tables A-4, A-5, and A-6),

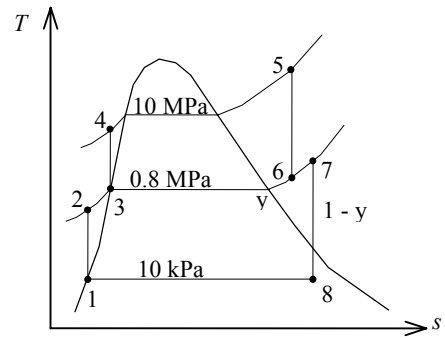

$$h_1 = h_{f@\,10\text{ kPa}} = 191.81 \text{ kJ/kg}$$

$$v_1 = v_{f@\,10\text{ kPa}} = 0.00101 \text{ m}^3\text{/kg}$$

$$w_{pI,\text{in}} = v_1(P_2 - P_1) = (0.00101 \text{ m}^3\text{/kg})(800 - 10 \text{ kPa})\left(\frac{1 \text{ kJ}}{1 \text{ kPa}\cdot\text{m}^3}\right)$$
$$= 0.80 \text{ kJ/kg}$$

$$h_2 = h_1 + w_{pI,\text{in}} = 191.81 + 0.80 = 192.61 \text{ kJ/kg}$$

$$\left.\begin{array}{l} P_3 = 0.8 \text{ MPa} \\ \text{sat.liquid} \end{array}\right\} \begin{array}{l} h_3 = h_{f@\,0.8\text{ MPa}} = 720.87 \text{ kJ/kg} \\ v_3 = v_{f@\,0.8\text{ MPa}} = 0.001115 \text{ m}^3\text{/kg} \end{array}$$

$$w_{pII,\text{in}} = v_3(P_4 - P_3) = (0.001115 \text{ m}^3\text{/kg})(10{,}000 - 800 \text{ kPa})\left(\frac{1 \text{ kJ}}{1 \text{ kPa}\cdot\text{m}^3}\right)$$
$$= 10.26 \text{ kJ/kg}$$

$$h_4 = h_3 + w_{pII,\text{in}} = 720.87 + 10.26 = 731.12 \text{ kJ/kg}$$

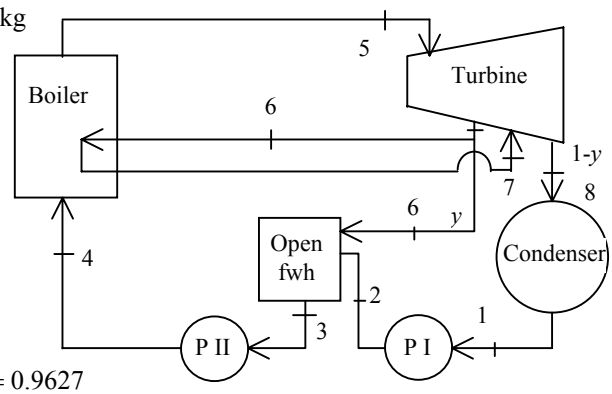

$$\left.\begin{array}{l} P_5 = 10 \text{ MPa} \\ T_5 = 550°\text{C} \end{array}\right\} \begin{array}{l} h_5 = 3502.0 \text{ kJ/kg} \\ s_5 = 6.7585 \text{ kJ/kg}\cdot\text{K} \end{array}$$

$$\left.\begin{array}{l} P_6 = 0.8 \text{ MPa} \\ s_6 = s_5 \end{array}\right\} h_6 = 2812.1 \text{ kJ/kg}$$

$$\left.\begin{array}{l} P_7 = 0.8 \text{ MPa} \\ T_7 = 500°\text{C} \end{array}\right\} \begin{array}{l} h_7 = 3481.3 \text{ kJ/kg} \\ s_7 = 7.8692 \text{ kJ/kg}\cdot\text{K} \end{array}$$

$$\left.\begin{array}{l} P_8 = 10 \text{ kPa} \\ s_8 = s_7 \end{array}\right\} \begin{array}{l} x_8 = \dfrac{s_8 - s_f}{s_{fg}} = \dfrac{7.8692 - 0.6492}{7.4996} = 0.9627 \\ h_8 = h_f + x_8 h_{fg} = 191.81 + (0.9627)(2392.1) = 2494.7 \text{ kJ/kg} \end{array}$$

The fraction of steam extracted is determined from the steady-flow energy balance equation applied to the feedwater heaters. Noting that $\dot{Q} \cong \dot{W} \cong \Delta\text{ke} \cong \Delta\text{pe} \cong 0$,

$$\dot{E}_{\text{in}} - \dot{E}_{\text{out}} = \Delta\dot{E}_{\text{system}}^{\nearrow 0\,(\text{steady})} = 0 \rightarrow \dot{E}_{\text{in}} = \dot{E}_{\text{out}}$$

$$\sum \dot{m}_i h_i = \sum \dot{m}_e h_e \longrightarrow \dot{m}_6 h_6 + \dot{m}_2 h_2 = \dot{m}_3 h_3 \longrightarrow y h_6 + (1-y) h_2 = 1(h_3)$$

where y is the fraction of steam extracted from the turbine ($= \dot{m}_6 / \dot{m}_3$). Solving for y,

$$y = \frac{h_3 - h_2}{h_6 - h_2} = \frac{720.87 - 192.61}{2812.1 - 192.61} = 0.2017$$

Then, $q_{\text{in}} = (h_5 - h_4) + (1-y)(h_7 - h_6) = (3502.0 - 731.12) + (1 - 0.2017)(3481.3 - 2812.1) = 3305.1 \text{ kJ/kg}$

$$q_{\text{out}} = (1-y)(h_8 - h_1) = (1 - 0.2017)(2494.7 - 191.81) = 1838.5 \text{ kJ/kg}$$

$$w_{\text{net}} = q_{\text{in}} - q_{\text{out}} = 3305.1 - 1838.5 = 1466.6 \text{ kJ/kg}$$

and $\dot{m} = \dfrac{\dot{W}_{\text{net}}}{w_{\text{net}}} = \dfrac{80{,}000 \text{ kJ/s}}{1466.1 \text{ kJ/kg}} = \mathbf{54.5\ kg/s}$

(*b*) $\eta_{\text{th}} = \dfrac{w_{\text{net}}}{q_{\text{in}}} = \dfrac{1466.1 \text{ kJ/kg}}{3305.1 \text{ kJ/kg}} = \mathbf{44.4\%}$

10-50 A steam power plant operates on an ideal reheat-regenerative Rankine cycle with a closed feedwater heater. The mass flow rate of steam through the boiler and the thermal efficiency of the cycle are to be determined.

Assumptions **1** Steady operating conditions exist. **2** Kinetic and potential energy changes are negligible.

Analysis

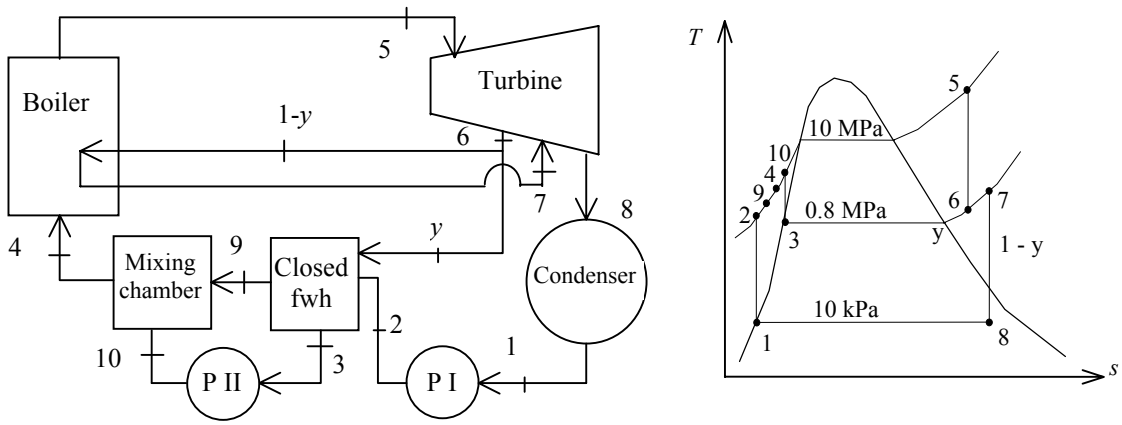

(*a*) From the steam tables (Tables A-4, A-5, and A-6),

$$h_1 = h_{f@\,10\text{ kPa}} = 191.81 \text{ kJ/kg}$$

$$v_1 = v_{f@\,10\text{ kPa}} = 0.00101 \text{ m}^3\text{/kg}$$

$$w_{pI,\text{in}} = v_1(P_2 - P_1) = (0.00101 \text{ m}^3\text{/kg})(10{,}000 - 10 \text{ kPa})\left(\frac{1 \text{ kJ}}{1 \text{ kPa}\cdot\text{m}^3}\right)$$
$$= 10.09 \text{ kJ/kg}$$

$$h_2 = h_1 + w_{pI,\text{in}} = 191.81 + 10.09 = 201.90 \text{ kJ/kg}$$

$$\left.\begin{array}{l} P_3 = 0.8 \text{ MPa} \\ \text{sat.liquid} \end{array}\right\} \begin{array}{l} h_3 = h_{f@\,0.8\text{ MPa}} = 720.87 \text{ kJ/kg} \\ v_3 = v_{f@\,0.8\text{ MPa}} = 0.001115 \text{ m}^3\text{/kg} \end{array}$$

$$w_{pII,\text{in}} = v_3(P_4 - P_3) = (0.001115 \text{ m}^3\text{/kg})(10{,}000 - 800 \text{ kPa})\left(\frac{1 \text{ kJ}}{1 \text{ kPa}\cdot\text{m}^3}\right)$$
$$= 10.26 \text{ kJ/kg}$$

$$h_4 = h_3 + w_{pII,\text{in}} = 720.87 + 10.26 = 731.13 \text{ kJ/kg}$$

Also, $h_4 = h_9 = h_{10} = 731.12$ kJ/kg since the two fluid streams that are being mixed have the same enthalpy.

$$\left.\begin{array}{l} P_5 = 10 \text{ MPa} \\ T_5 = 550°\text{C} \end{array}\right\} \begin{array}{l} h_5 = 3502.0 \text{ kJ/kg} \\ s_5 = 6.7585 \text{ kJ/kg}\cdot\text{K} \end{array}$$

$$\left.\begin{array}{l} P_6 = 0.8 \text{ MPa} \\ s_6 = s_5 \end{array}\right\} h_6 = 2812.7 \text{ kJ/kg}$$

$$\left.\begin{array}{l} P_7 = 0.8 \text{ MPa} \\ T_7 = 500°\text{C} \end{array}\right\} \begin{array}{l} h_7 = 3481.3 \text{ kJ/kg} \\ s_7 = 7.8692 \text{ kJ/kg}\cdot\text{K} \end{array}$$

$$\left.\begin{array}{l} P_8 = 10 \text{ kPa} \\ s_8 = s_7 \end{array}\right\} \begin{array}{l} x_8 = \dfrac{s_8 - s_f}{s_{fg}} = \dfrac{7.8692 - 0.6492}{7.4996} = 0.9627 \\ h_8 = h_f + x_8 h_{fg} = 191.81 + (0.9627)(2392.1) = 2494.7 \text{ kJ/kg} \end{array}$$

The fraction of steam extracted is determined from the steady-flow energy balance equation applied to the feedwater heaters. Noting that $\dot{Q} \cong \dot{W} \cong \Delta\text{ke} \cong \Delta\text{pe} \cong 0$,

$$\dot{E}_{\text{in}} - \dot{E}_{\text{out}} = \Delta\dot{E}_{\text{system}}^{\nearrow 0\,(\text{steady})} = 0$$

$$\dot{E}_{\text{in}} = \dot{E}_{\text{out}}$$

$$\sum \dot{m}_i h_i = \sum \dot{m}_e h_e \longrightarrow \dot{m}_2(h_9 - h_2) = \dot{m}_3(h_6 - h_3) \longrightarrow (1-y)(h_9 - h_2) = y(h_6 - h_3)$$

where y is the fraction of steam extracted from the turbine ($= \dot{m}_3 / \dot{m}_4$). Solving for y,

$$y = \frac{h_9 - h_2}{(h_6 - h_3) + (h_9 - h_2)} = \frac{731.13 - 201.90}{2812.7 - 720.87 + 731.13 - 201.90} = 0.2019$$

Then,

$$q_{\text{in}} = (h_5 - h_4) + (1-y)(h_7 - h_6) = (3502.0 - 731.13) + (1 - 0.2019)(3481.3 - 2812.7) = 3304.5 \text{ kJ/kg}$$

$$q_{\text{out}} = (1-y)(h_8 - h_1) = (1 - 0.2019)(2494.7 - 191.81) = 1837.9 \text{ kJ/kg}$$

$$w_{\text{net}} = q_{\text{in}} - q_{\text{out}} = 3304.5 - 1837.8 = 1466.6 \text{ kJ/kg}$$

and

$$\dot{m} = \frac{\dot{W}_{\text{net}}}{w_{\text{net}}} = \frac{80{,}000 \text{ kJ/s}}{1467.1 \text{ kJ/kg}} = \mathbf{54.5\ kg/s}$$

(*b*) $$\eta_{\text{th}} = 1 - \frac{q_{\text{out}}}{q_{\text{in}}} = 1 - \frac{1837.8 \text{ kJ/kg}}{3304.5 \text{ kJ/kg}} = \mathbf{44.4\%}$$

10-51E A steam power plant operates on an ideal reheat-regenerative Rankine cycle with one reheater and two open feedwater heaters. The mass flow rate of steam through the boiler, the net power output of the plant, and the thermal efficiency of the cycle are to be determined.

Assumptions **1** Steady operating conditions exist. **2** Kinetic and potential energy changes are negligible.

Analysis

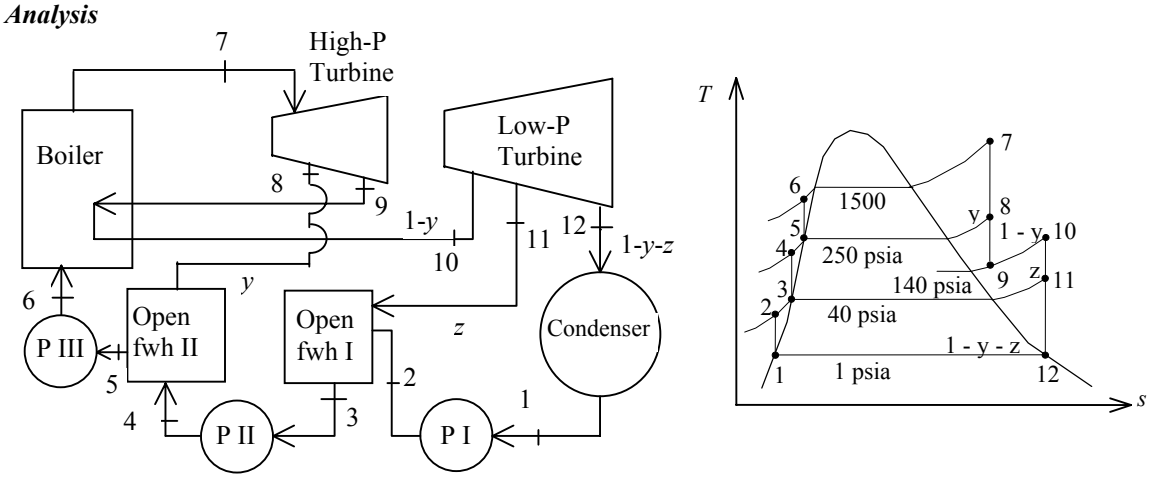

(*a*) From the steam tables (Tables A-4E, A-5E, and A-6E),

$$h_1 = h_{f@\,1\text{ psia}} = 69.72 \text{ Btu/lbm}$$

$$v_1 = v_{f@\,1\text{ psia}} = 0.01614 \text{ ft}^3/\text{lbm}$$

$$\begin{aligned} w_{pI,\text{in}} &= v_1(P_2 - P_1) \\ &= (0.01614 \text{ ft}^3/\text{lbm})(40 - 1 \text{ psia})\left(\frac{1 \text{ Btu}}{5.4039 \text{ psia}\cdot\text{ft}^3}\right) \\ &= 0.12 \text{ Btu/lbm} \end{aligned}$$

$$h_2 = h_1 + w_{pI,\text{in}} = 69.72 + 0.12 = 69.84 \text{ Btu/lbm}$$

$$\left.\begin{aligned} &P_3 = 40 \text{ psia} \\ &\text{sat. liquid} \end{aligned}\right\} \begin{aligned} h_3 &= h_{f@\,40\text{ psia}} = 236.14 \text{ Btu/lbm} \\ v_3 &= v_{f@\,40\text{ psia}} = 0.01715 \text{ ft}^3/\text{lbm} \end{aligned}$$

$$\begin{aligned} w_{pII,\text{in}} &= v_3(P_4 - P_3) \\ &= (0.01715 \text{ ft}^3/\text{lbm})(250 - 40 \text{ psia})\left(\frac{1 \text{ Btu}}{5.4039 \text{ psia}\cdot\text{ft}^3}\right) \\ &= 0.67 \text{ Btu/lbm} \end{aligned}$$

$$h_4 = h_3 + w_{pII,in} = 236.14 + 0.67 = 236.81 \text{ Btu/lbm}$$

$$\left.\begin{aligned} &P_5 = 250 \text{ psia} \\ &\text{sat. liquid} \end{aligned}\right\} \begin{aligned} h_5 &= h_{f@\,250\text{ psia}} = 376.09 \text{ Btu/lbm} \\ v_5 &= v_{f@\,250\text{ psia}} = 0.01865 \text{ ft}^3/\text{lbm} \end{aligned}$$

$$\begin{aligned} w_{pIII,\text{in}} &= v_5(P_6 - P_5) \\ &= (0.01865 \text{ ft}^3/\text{lbm})(1500 - 250 \text{ psia})\left(\frac{1 \text{ Btu}}{5.4039 \text{ psia}\cdot\text{ft}^3}\right) \\ &= 4.31 \text{ Btu/lbm} \end{aligned}$$

$$h_6 = h_5 + w_{pIII,\text{in}} = 376.09 + 4.31 = 380.41 \text{ Btu/lbm}$$

$$\left.\begin{aligned} P_7 &= 1500 \text{ psia} \\ T_7 &= 1100°\text{F} \end{aligned}\right\} \begin{aligned} h_7 &= 1550.5 \text{ Btu/lbm} \\ s_7 &= 1.6402 \text{ Btu/lbm}\cdot\text{R} \end{aligned}$$

$$\left.\begin{aligned} P_8 &= 250 \text{ psia} \\ s_8 &= s_7 \end{aligned}\right\} h_8 = 1308.5 \text{ Btu/lbm}$$

$$\left.\begin{array}{l} P_9 = 140 \text{ psia} \\ s_9 = s_7 \end{array}\right\} h_9 = 1248.8 \text{ Btu/lbm}$$

$$\left.\begin{array}{l} P_{10} = 140 \text{ psia} \\ T_{10} = 1000°\text{F} \end{array}\right\} \begin{array}{l} h_{10} = 1531.3 \text{ Btu/lbm} \\ s_{10} = 1.8832 \text{ Btu/lbm}\cdot\text{R} \end{array}$$

$$\left.\begin{array}{l} P_{11} = 40 \text{ psia} \\ s_{11} = s_{10} \end{array}\right\} h_{11} = 1356.0 \text{ Btu/lbm}$$

$$\left.\begin{array}{l} P_{12} = 1 \text{ psia} \\ s_{12} = s_{10} \end{array}\right\} \begin{array}{l} x_{12} = \dfrac{s_{12} - s_f}{s_{fg}} = \dfrac{1.8832 - 0.13262}{1.84495} = 0.9488 \\ h_{12} = h_f + x_{12} h_{fg} = 69.72 + (0.9488)(1035.7) \\ \qquad = 1052.4 \text{ Btu/lbm} \end{array}$$

The fraction of steam extracted is determined from the steady-flow energy balance equation applied to the feedwater heaters. Noting that $\dot{Q} \cong \dot{W} \cong \Delta\text{ke} \cong \Delta\text{pe} \cong 0$,

$$\dot{E}_{\text{in}} - \dot{E}_{\text{out}} = \Delta\dot{E}_{\text{system}}^{\nearrow 0 \text{ (steady)}} = 0$$

FWH-2:

$$\dot{E}_{\text{in}} = \dot{E}_{\text{out}}$$

$$\sum \dot{m}_i h_i = \sum \dot{m}_e h_e \longrightarrow \dot{m}_8 h_8 + \dot{m}_4 h_4 = \dot{m}_5 h_5 \longrightarrow y h_8 + (1-y) h_4 = 1(h_5)$$

where y is the fraction of steam extracted from the turbine ($= \dot{m}_8 / \dot{m}_5$). Solving for y,

$$y = \frac{h_5 - h_4}{h_8 - h_4} = \frac{376.09 - 236.81}{1308.5 - 236.81} = 0.1300$$

$$\dot{E}_{\text{in}} - \dot{E}_{\text{out}} = \Delta\dot{E}_{\text{system}}^{\nearrow 0 \text{ (steady)}} = 0$$

FWH-1

$$\dot{E}_{\text{in}} = \dot{E}_{\text{out}}$$

$$\sum \dot{m}_i h_i = \sum \dot{m}_e h_e \longrightarrow \dot{m}_{11} h_{11} + \dot{m}_2 h_2 = \dot{m}_3 h_3 \longrightarrow z h_{11} + (1-y-z) h_2 = (1-y) h_3$$

where z is the fraction of steam extracted from the turbine ($= \dot{m}_9 / \dot{m}_5$) at the second stage. Solving for z,

$$z = \frac{h_3 - h_2}{h_{11} - h_2}(1-y) = \frac{236.14 - 69.84}{1356.0 - 69.84}(1 - 0.1300) = 0.1125$$

Then,

$$q_{\text{in}} = h_7 - h_6 + (1-y)(h_{10} - h_9) = 1550.5 - 380.41 + (1 - 0.1300)(1531.3 - 1248.8) = 1415.8 \text{ Btu/lbm}$$

$$q_{\text{out}} = (1-y-z)(h_{12} - h_1) = (1 - 0.1300 - 0.1125)(1052.4 - 69.72) = 744.4 \text{ Btu/lbm}$$

$$w_{\text{net}} = q_{\text{in}} - q_{\text{out}} = 1415.8 - 744.4 = 671.4 \text{ Btu/lbm}$$

and

$$\dot{m} = \frac{\dot{Q}_{\text{in}}}{q_{\text{in}}} = \frac{4 \times 10^5 \text{ Btu/s}}{1415.8 \text{ Btu/lbm}} = \mathbf{282.5\ lbm/s}$$

(*b*) $$\dot{W}_{\text{net}} = \dot{m} w_{\text{net}} = (282.5 \text{ lbm/s})(671.4 \text{ Btu/lbm})\left(\frac{1.055 \text{ kJ}}{1 \text{ Btu}}\right) = \mathbf{200.1\ MW}$$

(*c*) $$\eta_{\text{th}} = 1 - \frac{q_{\text{out}}}{q_{\text{in}}} = 1 - \frac{744.4 \text{ Btu/lbm}}{1415.8 \text{ Btu/lbm}} = \mathbf{47.4\%}$$

10-52 A steam power plant that operates on an ideal regenerative Rankine cycle with a closed feedwater heater is considered. The temperature of the steam at the inlet of the closed feedwater heater, the mass flow rate of the steam extracted from the turbine for the closed feedwater heater, the net power output, and the thermal efficiency are to be determined.

Assumptions **1** Steady operating conditions exist. **2** Kinetic and potential energy changes are negligible.

Analysis (*a*) From the steam tables (Tables A-4, A-5, and A-6),

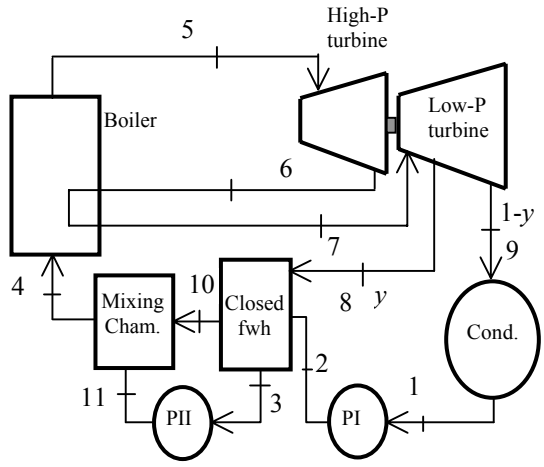

$$h_1 = h_{f@\,20\text{ kPa}} = 251.42 \text{ kJ/kg}$$

$$v_1 = v_{f@\,20\text{ kPa}} = 0.001017 \text{ m}^3\text{/kg}$$

$$w_{pI,\text{in}} = v_1(P_2 - P_1)/\eta_p$$
$$= (0.001017 \text{ m}^3\text{/kg})(12{,}500 - 20 \text{ kPa})/0.88$$
$$= 14.43 \text{ kJ/kg}$$

$$h_2 = h_1 + w_{pI,\text{in}} = 251.42 + 14.43 = 265.85 \text{ kJ/kg}$$

$$\left.\begin{array}{l} P_3 = 1 \text{ MPa} \\ \text{sat. liquid} \end{array}\right\} \begin{array}{l} h_3 = h_{f@\,1\text{ MPa}} = 762.51 \text{ kJ/kg} \\ v_3 = v_{f@\,1\text{ MPa}} = 0.001127 \text{ m}^3\text{/kg} \end{array}$$

$$w_{pII,\text{in}} = v_3(P_{11} - P_3)/\eta_p$$
$$= (0.001127 \text{ m}^3\text{/kg})(12{,}500 - 1000 \text{ kPa})/0.88$$
$$= 14.73 \text{ kJ/kg}$$

$$h_{11} = h_3 + w_{pII,\text{in}} = 762.51 + 14.73 = 777.25 \text{ kJ/kg}$$

Also, $h_4 = h_{10} = h_{11} = 777.25$ kJ/kg since the two fluid streams which are being mixed have the same enthalpy.

$$\left.\begin{array}{l} P_5 = 12.5 \text{ MPa} \\ T_5 = 550°\text{C} \end{array}\right\} \begin{array}{l} h_5 = 3476.5 \text{ kJ/kg} \\ s_5 = 6.6317 \text{ kJ/kg}\cdot\text{K} \end{array}$$

$$\left.\begin{array}{l} P_6 = 5 \text{ MPa} \\ s_6 = s_5 \end{array}\right\} h_{6s} = 3185.6 \text{ kJ/kg}$$

$$\eta_T = \frac{h_5 - h_6}{h_5 - h_{6s}} \longrightarrow h_6 = h_5 - \eta_T(h_5 - h_{6s})$$
$$= 3476.5 - (0.88)(3476.5 - 3185.6) = 3220.5 \text{ kJ/kg}$$

$$\left.\begin{array}{l} P_7 = 5 \text{ MPa} \\ T_7 = 550°\text{C} \end{array}\right\} \begin{array}{l} h_7 = 3550.9 \text{ kJ/kg} \\ s_7 = 7.1238 \text{ kJ/kg}\cdot\text{K} \end{array}$$

$$\left.\begin{array}{l} P_8 = 1 \text{ MPa} \\ s_8 = s_7 \end{array}\right\} h_{8s} = 3051.1 \text{ kJ/kg}$$

$$\eta_T = \frac{h_7 - h_8}{h_7 - h_{8s}} \longrightarrow h_8 = h_7 - \eta_T(h_7 - h_{8s})$$
$$= 3550.9 - (0.88)(3550.9 - 3051.1) = 3111.1 \text{ kJ/kg}$$

$$\left.\begin{array}{l} P_8 = 1 \text{ MPa} \\ h_8 = 3111.1 \text{ kJ/kg} \end{array}\right\} T_8 = \mathbf{328°C}$$

$$\left.\begin{array}{l} P_9 = 20\text{ kPa} \\ s_9 = s_7 \end{array}\right\} h_{9s} = 2347.9\text{ kJ/kg}$$

$$\eta_T = \frac{h_7 - h_9}{h_7 - h_{9s}} \longrightarrow h_9 = h_7 - \eta_T\left(h_7 - h_{9s}\right)$$
$$= 3550.9 - (0.88)(3550.9 - 2347.9) = 2492.2\text{ kJ/kg}$$

The fraction of steam extracted from the low pressure turbine for closed feedwater heater is determined from the steady-flow energy balance equation applied to the feedwater heater. Noting that $\dot{Q} \cong \dot{W} \cong \Delta ke \cong \Delta pe \cong 0$,

$$(1-y)(h_{10} - h_2) = y(h_8 - h_3)$$
$$(1-y)(777.25 - 265.85) = y(3111.1 - 762.51) \longrightarrow y = 0.1788$$

The corresponding mass flow rate is

$$\dot{m}_8 = y\dot{m}_5 = (0.1788)(24\text{ kg/s}) = \mathbf{4.29\ kg/s}$$

(*c*) Then,

$$q_{\text{in}} = h_5 - h_4 + h_7 - h_6 = 3476.5 - 777.25 + 3550.9 - 3220.5 = 3029.7\text{ kJ/kg}$$
$$q_{\text{out}} = (1-y)(h_9 - h_1) = (1 - 0.1788)(2492.2 - 251.42) = 1840.1\text{ kJ/kg}$$

and

$$\dot{W}_{\text{net}} = \dot{m}(q_{\text{in}} - q_{\text{out}}) = (24\text{ kg/s})(3029.7 - 1840.1)\text{kJ/kg} = \mathbf{28{,}550\ kW}$$

(*b*) The thermal efficiency is determined from

$$\eta_{\text{th}} = 1 - \frac{q_{\text{out}}}{q_{\text{in}}} = 1 - \frac{1840.1\text{ kJ/kg}}{3029.7\text{ kJ/kg}} = 0.393 = \mathbf{39.3\%}$$

Second-Law Analysis of Vapor Power Cycles

10-53C In the simple ideal Rankine cycle, irreversibilities occur during heat addition and heat rejection processes in the boiler and the condenser, respectively, and both are due to temperature difference. Therefore, the irreversibilities can be decreased and thus the 2nd law efficiency can be increased by minimizing the temperature differences during heat transfer in the boiler and the condenser. One way of doing that is regeneration.

10-54 The exergy destructions associated with each of the processes of the Rankine cycle described in Prob. 10-15 are to be determined for the specified source and sink temperatures.

Assumptions **1** Steady operating conditions exist. **2** Kinetic and potential energy changes are negligible.

Analysis From Problem 10-15,

$$s_1 = s_2 = s_{f@\,50\text{ kPa}} = 1.0912 \text{ kJ/kg}\cdot\text{K}$$
$$s_3 = s_4 = 6.5412 \text{ kJ/kg}\cdot\text{K}$$
$$q_{in} = 2650.72 \text{ kJ/kg}$$
$$q_{\text{out}} = 1931.8 \text{ kJ/kg}$$

Processes 1-2 and 3-4 are isentropic. Thus, $i_{12} = \mathbf{0}$ and $i_{34} = \mathbf{0}$. Also,

$$x_{\text{destroyed},23} = T_0\left(s_3 - s_2 + \frac{q_{R,23}}{T_R}\right) = (290\text{ K})\left(6.5412 - 1.0912 + \frac{-2650.8\text{ kJ/kg}}{1500\text{ K}}\right) = \mathbf{1068\ \ kJ/kg}$$

$$x_{\text{destroyed},41} = T_0\left(s_1 - s_4 + \frac{q_{R,41}}{T_R}\right) = (290\text{ K})\left(1.0912 - 6.5412 + \frac{1931.8\text{ kJ/kg}}{290\text{ K}}\right) = \mathbf{351.3\ \ kJ/kg}$$

10-55 The exergy destructions associated with each of the processes of the Rankine cycle described in Prob. 10-16 are to be determined for the specified source and sink temperatures.

Assumptions **1** Steady operating conditions exist. **2** Kinetic and potential energy changes are negligible.

Analysis From Problem 10-16,

$$s_1 = s_2 = s_{f@10\text{kPa}} = 0.6492 \text{ kJ/kg}\cdot\text{K}$$
$$s_3 = s_4 = 6.5995 \text{ kJ/kg}\cdot\text{K}$$
$$q_{\text{in}} = 3173.2 \text{ kJ/kg}$$
$$q_{\text{out}} = 1897.9 \text{ kJ/kg}$$

Processes 1-2 and 3-4 are isentropic. Thus, $i_{12} = \mathbf{0}$ and $i_{34} = \mathbf{0}$. Also,

$$x_{\text{destroyed},23} = T_0\left(s_3 - s_2 + \frac{q_{R,23}}{T_R}\right) = (290\text{ K})\left(6.5995 - 0.6492 + \frac{-3173.2\text{ kJ/kg}}{1500\text{ K}}\right) = \mathbf{1112.1\ \ kJ/kg}$$

$$x_{\text{destroyed},41} = T_0\left(s_1 - s_4 + \frac{q_{R,41}}{T_R}\right) = (290\text{ K})\left(0.6492 - 6.5995 + \frac{1897.9\text{ kJ/kg}}{290\text{ K}}\right) = \mathbf{172.3\ \ kJ/kg}$$

10-56 The exergy destruction associated with the heat rejection process in Prob. 10-22 is to be determined for the specified source and sink temperatures. The exergy of the steam at the boiler exit is also to be determined.

Assumptions **1** Steady operating conditions exist. **2** Kinetic and potential energy changes are negligible.

Analysis From Problem 10-22,

$$s_1 = s_2 = s_{f@10\text{kPa}} = 0.6492 \text{ kJ/kg}\cdot\text{K}$$
$$s_3 = s_4 = 6.8000 \text{ kJ/kg}\cdot\text{K}$$
$$h_3 = 3411.4 \text{ kJ/kg}$$
$$q_{\text{out}} = 1961.8 \text{ kJ/kg}$$

The exergy destruction associated with the heat rejection process is

$$x_{\text{destroyed},41} = T_0\left(s_1 - s_4 + \frac{q_{R,41}}{T_R}\right) = (290 \text{ K})\left(0.6492 - 6.8000 + \frac{1961.8 \text{ kJ/kg}}{290 \text{ K}}\right) = \mathbf{178.0\ kJ/kg}$$

The exergy of the steam at the boiler exit is simply the flow exergy,

$$\psi_3 = (h_3 - h_0) - T_0(s_3 - s_0) + \frac{V_3^2}{2}^{\nearrow 0} + qz_3^{\nearrow 0}$$
$$= (h_3 - h_0) - T_0(s_3 - s_0)$$

where
$$h_0 = h_{@(290\text{ K},\ 100\text{ kPa})} \cong h_{f\ @\ 290\text{ K}} = 71.95 \text{ kJ/kg}$$
$$s_0 = s_{@(290\text{ K},100\text{ kPa})} \cong s_{f\ @\ 290\text{ K}} = 0.2533 \text{ kJ/kg}\cdot\text{K}$$

Thus, $\psi_3 = (3411.4 - 71.95)\text{ kJ/kg} - (290\text{ K})(6.800 - 0.2532)\text{ kJ/kg}\cdot\text{K} = \mathbf{1440.9\ \ kJ/kg}$

10-57 The exergy destructions associated with each of the processes of the reheat Rankine cycle described in Prob. 10-32 are to be determined for the specified source and sink temperatures.

Assumptions **1** Steady operating conditions exist. **2** Kinetic and potential energy changes are negligible.

Analysis From Problem 10-32,

$$s_1 = s_2 = s_{f@20\text{kPa}} = 0.8320 \text{ kJ/kg}\cdot\text{K}$$
$$s_3 = s_4 = 6.7266 \text{ kJ/kg}\cdot\text{K}$$
$$s_5 = s_6 = 7.2359 \text{ kJ/kg}\cdot\text{K}$$
$$q_{23,\text{in}} = 3399.5 - 259.54 = 3140.0 \text{ kJ/kg}$$
$$q_{45,\text{in}} = 3457.2 - 3105.1 = 352.1 \text{ kJ/kg}$$
$$q_{\text{out}} = h_6 - h_1 = 2385.2 - 251.42 = 2133.8 \text{ kJ/kg}$$

Processes 1-2, 3-4, and 5-6 are isentropic. Thus, $i_{12} = i_{34} = i_{56} = \mathbf{0}$. Also,

$$x_{\text{destroyed},23} = T_0\left(s_3 - s_2 + \frac{q_{R,23}}{T_R}\right) = (300 \text{ K})\left(6.7266 - 0.8320 + \frac{-3140.0 \text{ kJ/kg}}{1800 \text{ K}}\right) = \mathbf{1245.0\ kJ/kg}$$

$$x_{\text{destroyed},45} = T_0\left(s_5 - s_4 + \frac{q_{R,45}}{T_R}\right) = (300 \text{ K})\left(7.2359 - 6.7266 + \frac{-352.5 \text{ kJ/kg}}{1800 \text{ K}}\right) = \mathbf{94.1\ kJ/kg}$$

$$x_{\text{destroyed},61} = T_0\left(s_1 - s_6 + \frac{q_{R,61}}{T_R}\right) = (300 \text{ K})\left(0.8320 - 7.2359 + \frac{2133.8 \text{ kJ/kg}}{300 \text{ K}}\right) = \mathbf{212.6\ kJ/kg}$$

10-58 EES Problem 10-57 is reconsidered. The problem is to be solved by the diagram window data entry feature of EES by including the effects of the turbine and pump efficiencies. Also, the *T-s* diagram is to be plotted.

Analysis The problem is solved using EES, and the solution is given below.

```
function x6$(x6) "this function returns a string to indicate the state of steam at point 6"
        x6$=''
        if (x6>1) then x6$='(superheated)'
        if (x6<0) then x6$='(subcooled)'
end
"Input Data - from diagram window"
{P[6] = 20 [kPa]
P[3] = 8000 [kPa]
T[3] = 500 [C]
P[4] = 3000 [kPa]
T[5] = 500 [C]
Eta_t = 100/100 "Turbine isentropic efficiency"
Eta_p = 100/100 "Pump isentropic efficiency"}
"Data for the irreversibility calculations:"
T_o = 300 [K]
T_R_L = 300 [K]
T_R_H = 1800 [K]
"Pump analysis"
Fluid$='Steam_IAPWS'
P[1] = P[6]
P[2]=P[3]
x[1]=0   "Sat'd liquid"
h[1]=enthalpy(Fluid$,P=P[1],x=x[1])
v[1]=volume(Fluid$,P=P[1],x=x[1])
s[1]=entropy(Fluid$,P=P[1],x=x[1])
T[1]=temperature(Fluid$,P=P[1],x=x[1])
W_p_s=v[1]*(P[2]-P[1])"SSSF isentropic pump work assuming constant specific volume"
W_p=W_p_s/Eta_p
h[2]=h[1]+W_p   "SSSF First Law for the pump"
v[2]=volume(Fluid$,P=P[2],h=h[2])
s[2]=entropy(Fluid$,P=P[2],h=h[2])
T[2]=temperature(Fluid$,P=P[2],h=h[2])
"High Pressure Turbine analysis"
h[3]=enthalpy(Fluid$,T=T[3],P=P[3])
s[3]=entropy(Fluid$,T=T[3],P=P[3])
v[3]=volume(Fluid$,T=T[3],P=P[3])
s_s[4]=s[3]
hs[4]=enthalpy(Fluid$,s=s_s[4],P=P[4])
Ts[4]=temperature(Fluid$,s=s_s[4],P=P[4])
Eta_t=(h[3]-h[4])/(h[3]-hs[4])"Definition of turbine efficiency"
T[4]=temperature(Fluid$,P=P[4],h=h[4])
s[4]=entropy(Fluid$,T=T[4],P=P[4])
v[4]=volume(Fluid$,s=s[4],P=P[4])
h[3] =W_t_hp+h[4]"SSSF First Law for the high pressure turbine"
"Low Pressure Turbine analysis"
P[5]=P[4]
s[5]=entropy(Fluid$,T=T[5],P=P[5])
h[5]=enthalpy(Fluid$,T=T[5],P=P[5])
s_s[6]=s[5]
hs[6]=enthalpy(Fluid$,s=s_s[6],P=P[6])
Ts[6]=temperature(Fluid$,s=s_s[6],P=P[6])
vs[6]=volume(Fluid$,s=s_s[6],P=P[6])
Eta_t=(h[5]-h[6])/(h[5]-hs[6])"Definition of turbine efficiency"
h[5]=W_t_lp+h[6]"SSSF First Law for the low pressure turbine"
x[6]=QUALITY(Fluid$,h=h[6],P=P[6])
```

```
"Boiler analysis"
Q_in + h[2]+h[4]=h[3]+h[5]"SSSF First Law for the Boiler"
"Condenser analysis"
h[6]=Q_out+h[1]"SSSF First Law for the Condenser"
T[6]=temperature(Fluid$,h=h[6],P=P[6])
s[6]=entropy(Fluid$,h=h[6],P=P[6])
x6s$=x6$(x[6])
"Cycle Statistics"
W_net=W_t_hp+W_t_lp-W_p
Eff=W_net/Q_in
"The irreversibilities (or exergy destruction) for each of the processes are:"
q_R_23 = - (h[3] - h[2]) "Heat transfer for the high temperature reservoir to process 2-3"
i_23 = T_o*(s[3] -s[2] + q_R_23/T_R_H)
q_R_45 = - (h[5] - h[4]) "Heat transfer for the high temperature reservoir to process 4-5"
i_45 = T_o*(s[5] -s[4] + q_R_45/T_R_H)
q_R_61 =  (h[6] - h[1]) "Heat transfer to the low temperature reservoir in process 6-1"
i_61 = T_o*(s[1] -s[6] + q_R_61/T_R_L)
i_34 = T_o*(s[4] -s[3])
i_56 = T_o*(s[6] -s[5])
i_12 = T_o*(s[2] -s[1])
```

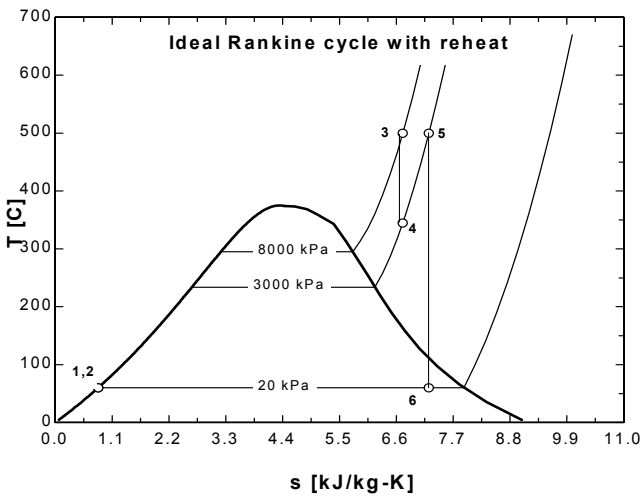

SOLUTION

```
Eff=0.389
Eta_p=1
Eta_t=1
Fluid$='Steam_IAPWS'
h[1]=251.4 [kJ/kg]
h[2]=259.5 [kJ/kg]
h[3]=3400 [kJ/kg]
h[4]=3105 [kJ/kg]
h[5]=3457 [kJ/kg]
h[6]=2385 [kJ/kg]
hs[4]=3105 [kJ/kg]
hs[6]=2385 [kJ/kg]
i_12=0.012 [kJ/kg]
i_23=1245.038 [kJ/kg]
i_34=-0.000 [kJ/kg]
i_45=94.028 [kJ/kg]
i_56=0.000 [kJ/kg]
i_61=212.659 [kJ/kg]
P[1]=20 [kPa]
P[2]=8000 [kPa]
P[3]=8000 [kPa]
P[4]=3000 [kPa]
P[5]=3000 [kPa]
P[6]=20 [kPa]
Q_in=3493 [kJ/kg]
Q_out=2134 [kJ/kg]
q_R_23=-3140 [kJ/kg]
q_R_45=-352.5 [kJ/kg]
q_R_61=2134 [kJ/kg]
s[1]=0.832 [kJ/kg-K]
s[2]=0.8321 [kJ/kg-K]
s[3]=6.727 [kJ/kg-K]
s[4]=6.727 [kJ/kg-K]
s[5]=7.236 [kJ/kg-K]
s[6]=7.236 [kJ/kg-K]
s_s[4]=6.727 [kJ/kg-K]
s_s[6]=7.236 [kJ/kg-K]
T[1]=60.06 [C]
T[2]=60.4 [C]
T[3]=500 [C]
T[4]=345.2 [C]
T[5]=500 [C]
T[6]=60.06 [C]
Ts[4]=345.2 [C]
Ts[6]=60.06 [C]
T_o=300 [K]
T_R_H=1800 [K]
T_R_L=300 [K]
v[1]=0.001017 [m^3/kg]
v[2]=0.001014 [m^3/kg]
v[3]=0.04177 [m^3/kg]
v[4]=0.08968 [m^3/kg]
vs[6]=6.922 [m^3/kg]
W_net=1359 [kJ/kg]
W_p=8.117 [kJ/kg]
W_p_s=8.117 [kJ/kg]
W_t_hp=294.8 [kJ/kg]
W_t_lp=1072 [kJ/kg]
x6s$=''
x[1]=0
```

x[6]=0.9051

10-59 The exergy destruction associated with the heat addition process and the expansion process in Prob. 10-34 are to be determined for the specified source and sink temperatures. The exergy of the steam at the boiler exit is also to be determined.

Assumptions **1** Steady operating conditions exist. **2** Kinetic and potential energy changes are negligible.

Analysis From Problem 10-34,

$$s_1 = s_2 = s_{f\ @\ 10\ \text{kPa}} = 0.6492\ \text{kJ/kg}\cdot\text{K}$$
$$s_3 = 6.5995\ \text{kJ/kg}\cdot\text{K}$$
$$s_4 = 6.8464\ \text{kJ/kg}\cdot\text{K} \quad (P_4 = 1\ \text{MPa},\ h_4 = 2902.0\ \text{kJ/kg})$$
$$s_5 = 7.7642\ \text{kJ/kg}\cdot\text{K}$$
$$s_6 = 8.3870\ \text{kJ/kg}\cdot\text{K} \quad (P_6 = 10\ \text{kPa},\ h_6 = 2664.8\ \text{kJ/kg})$$
$$h_3 = 3375.1\ \text{kJ/kg}$$
$$q_{\text{in}} = 3749.8\ \text{kJ/kg}$$

The exergy destruction associated with the combined pumping and the heat addition processes is

$$x_{\text{destroyed}} = T_0\left(s_3 - s_1 + s_5 - s_4 + \frac{q_{R,15}}{T_R}\right)$$
$$= (285\ \text{K})\left(6.5995 - 0.6492 + 7.7642 - 6.8464 + \frac{-3749.8\ \text{kJ/kg}}{1600\ \text{K}}\right) = 1289.5\ \text{kJ/kg}$$

The exergy destruction associated with the pumping process is

$$x_{\text{destroyed,12}} \cong w_{p,a} - w_{p,s} = w_{p,a} - v\Delta P = 10.62 - 10.09 = 0.53\text{kJ/kg}$$

Thus,

$$x_{\text{destroyed, heating}} = x_{\text{destroyed}} - x_{\text{destroyed,12}} = 1289.5 - 0.5 = \mathbf{1289\ kJ/kg}$$

The exergy destruction associated with the expansion process is

$$x_{\text{destroyed,34}} = T_0\left((s_4 - s_3) + (s_6 - s_5) + \frac{q_{R,36}}{T_R}^{\nearrow 0}\right)$$
$$= (285\ \text{K})(6.8464 - 6.5995 + 8.3870 - 7.7642)\text{kJ/kg}\cdot\text{K} = \mathbf{247.9\ \ kJ/kg}$$

The exergy of the steam at the boiler exit is determined from

$$\psi_3 = (h_3 - h_0) - T_0(s_3 - s_0) + \frac{V_3^2}{2}^{\nearrow 0} + qz_3^{\nearrow 0}$$
$$= (h_3 - h_0) - T_0(s_3 - s_0)$$

where

$$h_0 = h_{@\ (285\ \text{K},\ 100\ \text{kPa})} \cong h_{f\ @\ 285\ \text{K}} = 50.51\ \text{kJ/kg}$$
$$s_0 = s_{@\ (285\ \text{K},\ 100\ \text{kPa})} \cong s_{f\ @\ 285\ \text{K}} = 0.1806\ \text{kJ/kg}\cdot\text{K}$$

Thus,

$$\psi_3 = (3375.1 - 50.51)\ \text{kJ/kg} - (285\ \text{K})(6.5995 - 0.1806)\ \text{kJ/kg}\cdot\text{K} = \mathbf{1495\ kJ/kg}$$

10-60 The exergy destruction associated with the regenerative cycle described in Prob. 10-44 is to be determined for the specified source and sink temperatures.

Assumptions **1** Steady operating conditions exist. **2** Kinetic and potential energy changes are negligible.

Analysis From Problem 10-44, $q_{\text{in}} = 2692.2$ kJ/kg and $q_{\text{out}} = 1675.7$ kJ/kg. Then the exergy destruction associated with this regenerative cycle is

$$x_{\text{destroyed},cycle} = T_0\left(\frac{q_{\text{out}}}{T_L} - \frac{q_{\text{in}}}{T_H}\right) = (290\text{ K})\left(\frac{1675.7\text{ kJ/kg}}{290\text{ K}} - \frac{2692.2\text{ kJ/kg}}{1500\text{ K}}\right) = \mathbf{1155\ \ kJ/kg}$$

10-61 The exergy destruction associated with the reheating and regeneration processes described in Prob. 10-49 are to be determined for the specified source and sink temperatures.

Assumptions **1** Steady operating conditions exist. **2** Kinetic and potential energy changes are negligible.

Analysis From Problem 10-49 and the steam tables,

$$y = 0.2016$$
$$s_3 = s_{f@0.8\text{MPa}} = 2.0457\text{ kJ/kg}\cdot\text{K}$$
$$s_5 = s_6 = 6.7585\text{ kJ/kg}\cdot\text{K}$$
$$s_7 = 7.8692\text{ kJ/kg}\cdot\text{K}$$
$$s_1 = s_2 = s_{f@10\text{kPa}} = 0.6492\text{ kJ/kg}\cdot\text{K}$$
$$q_{\text{reheat}} = h_7 - h_6 = 3481.3 - 2812.7 = 668.6\text{ kJ/kg}$$

Then the exergy destruction associated with reheat and regeneration processes are

$$x_{\text{destroyed,reheat}} = T_0\left(s_7 - s_6 + \frac{q_{R,67}}{T_R}\right)$$
$$= (290\text{ K})\left(7.8692 - 6.7585 + \frac{-668.6\text{ kJ/kg}}{1800\text{ K}}\right) = \mathbf{214.3\ \ kJ/kg}$$

$$x_{\text{destroyed,regen}} = T_0 s_{\text{gen}} = T_0\left(\sum m_e s_e - \sum m_i s_i + \frac{q_{\text{surr}}}{T_0}^{\nearrow 0}\right) = T_0\left(s_3 - ys_6 - (1-y)s_2\right)$$
$$= (290\text{ K})\left[2.0457 - (0.2016)(6.7585) - (1-0.2016)(0.6492)\right] = \mathbf{47.8\ kJ/kg}$$

10-62 A single-flash geothermal power plant uses hot geothermal water at 230ºC as the heat source. The power output from the turbine, the thermal efficiency of the plant, the exergy of the geothermal liquid at the exit of the flash chamber, and the exergy destructions and exergy efficiencies for the flash chamber, the turbine, and the entire plant are to be determined.

Assumptions **1** Steady operating conditions exist. **2** Kinetic and potential energy changes are negligible.

Analysis (*a*) We use properties of water for geothermal water (Tables A-4, A-5, and A-6)

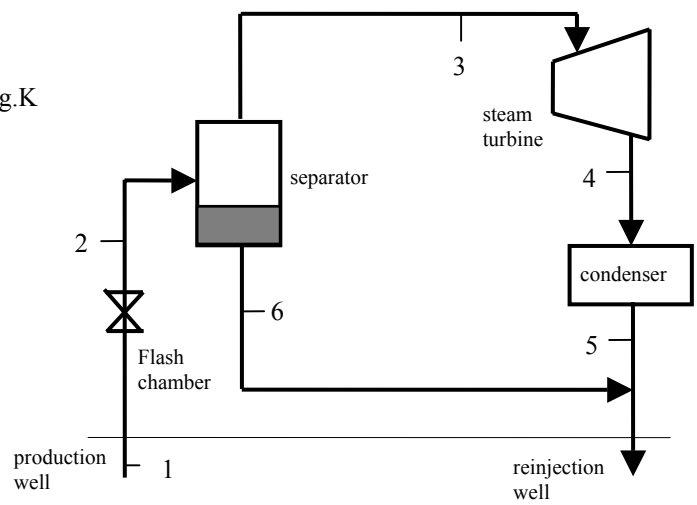

$$\left.\begin{array}{l} T_1 = 230°\text{C} \\ x_1 = 0 \end{array}\right\} \begin{array}{l} h_1 = 990.14 \text{ kJ/kg} \\ s_1 = 2.6100 \text{ kJ/kg.K} \end{array}$$

$$\left.\begin{array}{l} P_2 = 500 \text{ kPa} \\ h_2 = h_1 = 990.14 \text{ kJ/kg} \end{array}\right\} \begin{array}{l} x_2 = 0.1661 \\ s_2 = 2.6841 \text{ kJ/kg.K} \end{array}$$

$$\dot{m}_3 = x_2 \dot{m}_1 = (0.1661)(230 \text{ kg/s}) = 38.19 \text{ kg/s}$$

$$\left.\begin{array}{l} P_3 = 500 \text{ kPa} \\ x_3 = 1 \end{array}\right\} \begin{array}{l} h_3 = 2748.1 \text{ kJ/kg} \\ s_3 = 6.8207 \text{ kJ/kg}\cdot\text{K} \end{array}$$

$$\left.\begin{array}{l} P_4 = 10 \text{ kPa} \\ x_4 = 0.95 \end{array}\right\} \begin{array}{l} h_4 = 2464.3 \text{ kJ/kg} \\ s_4 = 7.7739 \text{ kJ/kg}\cdot\text{K} \end{array}$$

$$\left.\begin{array}{l} P_6 = 500 \text{ kPa} \\ x_6 = 0 \end{array}\right\} \begin{array}{l} h_6 = 640.09 \text{ kJ/kg} \\ s_6 = 1.8604 \text{ kJ/kg}\cdot\text{K} \end{array}$$

$$\dot{m}_6 = \dot{m}_1 - \dot{m}_3 = 230 - 38.19 = 191.81 \text{ kg/s}$$

The power output from the turbine is

$$\dot{W}_{\text{T}} = \dot{m}_3 (h_3 - h_4) = (38.19 \text{ kJ/kg})(2748.1 - 2464.3)\text{kJ/kg} = \mathbf{10{,}842\ kW}$$

We use saturated liquid state at the standard temperature for dead state properties

$$\left.\begin{array}{l} T_0 = 25°\text{C} \\ x_0 = 0 \end{array}\right\} \begin{array}{l} h_0 = 104.83 \text{ kJ/kg} \\ s_0 = 0.3672 \text{ kJ/kg} \end{array}$$

$$\dot{E}_{\text{in}} = \dot{m}_1 (h_1 - h_0) = (230 \text{ kJ/kg})(990.14 - 104.83)\text{kJ/kg} = 203{,}622 \text{ kW}$$

$$\eta_{\text{th}} = \frac{\dot{W}_{\text{T,out}}}{\dot{E}_{\text{in}}} = \frac{10{,}842}{203{,}622} = 0.0532 = \mathbf{5.3\%}$$

(*b*) The specific exergies at various states are

$$\psi_1 = h_1 - h_0 - T_0 (s_1 - s_0) = (990.14 - 104.83)\text{kJ/kg} - (298 \text{ K})(2.6100 - 0.3672)\text{kJ/kg.K} = 216.53 \text{ kJ/kg}$$

$$\psi_2 = h_2 - h_0 - T_0 (s_2 - s_0) = (990.14 - 104.83)\text{kJ/kg} - (298 \text{ K})(2.6841 - 0.3672)\text{kJ/kg.K} = 194.44 \text{ kJ/kg}$$

$$\psi_3 = h_3 - h_0 - T_0 (s_3 - s_0) = (2748.1 - 104.83)\text{kJ/kg} - (298 \text{ K})(6.8207 - 0.3672)\text{kJ/kg.K} = 719.10 \text{ kJ/kg}$$

$$\psi_4 = h_4 - h_0 - T_0 (s_4 - s_0) = (2464.3 - 104.83)\text{kJ/kg} - (298 \text{ K})(7.7739 - 0.3672)\text{kJ/kg.K} = 151.05 \text{ kJ/kg}$$

$$\psi_6 = h_6 - h_0 - T_0 (s_6 - s_0) = (640.09 - 104.83)\text{kJ/kg} - (298 \text{ K})(1.8604 - 0.3672)\text{kJ/kg.K} = 89.97 \text{ kJ/kg}$$

The exergy of geothermal water at state 6 is

$$\dot{X}_6 = \dot{m}_6 \psi_6 = (191.81 \text{ kg/s})(89.97 \text{ kJ/kg}) = \mathbf{17{,}257\ kW}$$

(*c*) Flash chamber:

$$\dot{X}_{\text{dest, FC}} = \dot{m}_1(\psi_1 - \psi_2) = (230\text{ kg/s})(216.53 - 194.44)\text{kJ/kg} = \mathbf{5080\ kW}$$

$$\eta_{\text{II,FC}} = \frac{\psi_2}{\psi_1} = \frac{194.44}{216.53} = 0.898 = \mathbf{89.8\%}$$

(*d*) Turbine:

$$\dot{X}_{\text{dest,T}} = \dot{m}_3(\psi_3 - \psi_4) - \dot{W}_{\text{T}} = (38.19\text{ kg/s})(719.10 - 151.05)\text{kJ/kg} - 10{,}842\text{ kW} = \mathbf{10{,}854\ kW}$$

$$\eta_{\text{II,T}} = \frac{\dot{W}_{\text{T}}}{\dot{m}_3(\psi_3 - \psi_4)} = \frac{10{,}842\text{ kW}}{(38.19\text{ kg/s})(719.10 - 151.05)\text{kJ/kg}} = 0.500 = \mathbf{50.0\%}$$

(*e*) Plant:

$$\dot{X}_{\text{in,Plant}} = \dot{m}_1\psi_1 = (230\text{ kg/s})(216.53\text{ kJ/kg}) = 49{,}802\text{ kW}$$

$$\dot{X}_{\text{dest,Plant}} = \dot{X}_{\text{in,Plant}} - \dot{W}_{\text{T}} = 49{,}802 - 10{,}842 = \mathbf{38{,}960\ kW}$$

$$\eta_{\text{II,Plant}} = \frac{\dot{W}_{\text{T}}}{\dot{X}_{\text{in,Plant}}} = \frac{10{,}842\text{ kW}}{49{,}802\text{ kW}} = 0.2177 = \mathbf{21.8\%}$$

Cogeneration

10-63C The utilization factor of a cogeneration plant is the ratio of the energy utilized for a useful purpose to the total energy supplied. It could be unity for a plant that does not produce any power.

10-64C No. A cogeneration plant may involve throttling, friction, and heat transfer through a finite temperature difference, and still have a utilization factor of unity.

10-65C Yes, if the cycle involves no irreversibilities such as throttling, friction, and heat transfer through a finite temperature difference.

10-66C Cogeneration is the production of more than one useful form of energy from the same energy source. Regeneration is the transfer of heat from the working fluid at some stage to the working fluid at some other stage.